UNIVERSAL HOLDER [P/N: 113789-HI]

Spare part for led lights

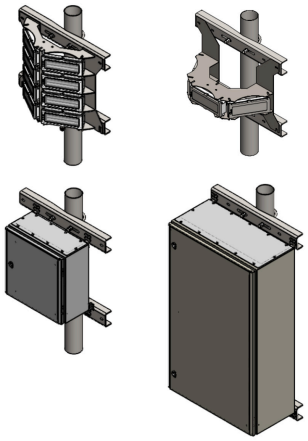

Set of 2 stainless corner to fix obsta power unit or flash-head on vertical tube U-bolts not included

Mechanical Characteristics	
Housing material	RAL7032 Steel