O-MAN-00018-OFC

USER MANUAL

Medium intensity red light type B (or C) with IR

OFC-RI-048 // 113790RI-048

OFC-RI-240 // 113790RI-240

OFC-RI-SOL // 113790RI-SOL

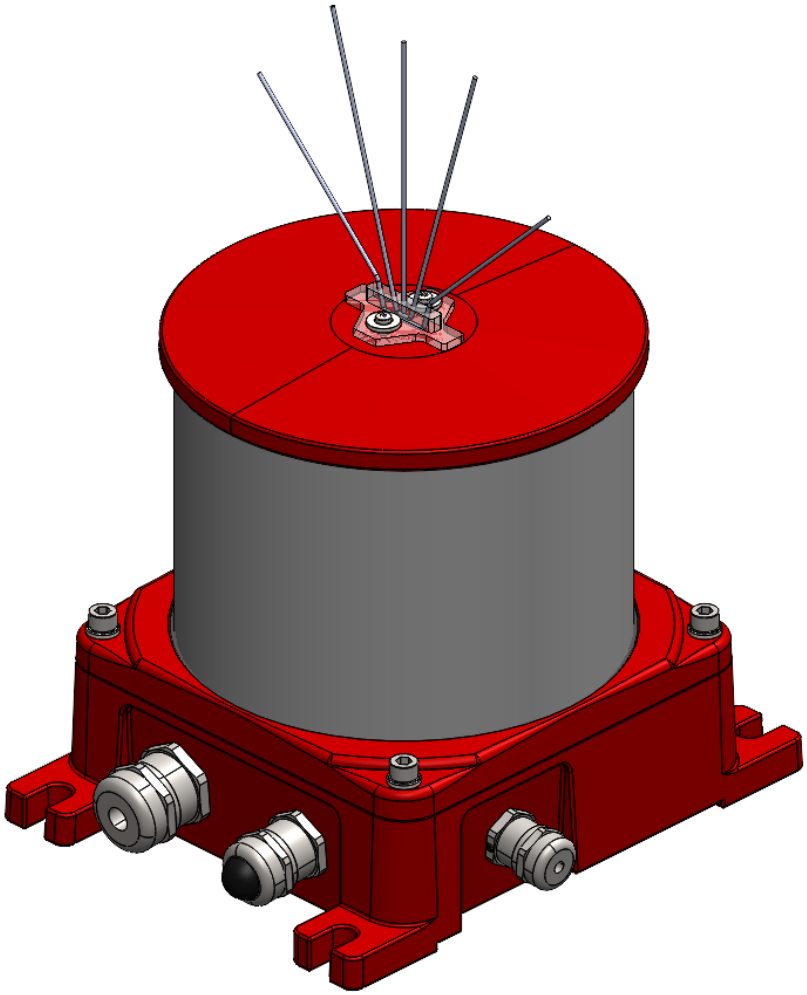

www.obsta.com

1. PRODUCT NAME AND PART NUMBER 3
1.1. MODEL IDENTIFICATION 3
1.2. VERSION HISTORY AND TECHNICAL DEVELOPMENTS 3
1.3. FAA VERSION 4
2. CAUTION 5
3. WARRANTY 6
4. INTRODUCTION 7
4.1. GENERAL INFORMATION 7
4.2. GENERAL DESCRIPTION 7
4.3. OPERATION 7
4.4. BEACON 8
5. INSTALLATION 10
5.1. UNPACKING 10
5.2. OVERVIEW 10
5.3. MOUNTING 11
6. WIRING 12
6.1. CAUTION BEFORE WIRING 12
6.2. CARD ACCESS 13
6.3. OVERVIEW 14
6.3.1. OFC 240, 048 and SOL 14
6.3.2. PCB led (lamp) 14
6.3.3. Internal connection diagram 15
6.3.4. Main card (box) 16
6.4. CABLE GLAND INSTALLATION 17
6.5. PHOTORESISTOR 18
6.6. THREE-POSITION MODE SELECTOR SWITCH 18
6.7. GPS ANTENNA INSTALLATION 19
6.8. TYPICAL WIRING 20
7. STARTUP AND CONFIGURATION 21
7.1. POWER-UP 21
7.2. CONFIGURATION 21
7.2.1. SW1 21
7.3. OPERATION LED 24
7.3.1. "GPS sync" led 24
7.3.2. "Default" led 25
7.3.3. "String Led" signal 25
8. MAINTENANCE 26
8.1. ANNUAL VISIT 26
8.2. SPARE PART 26
9. TECHNICAL SPECIFICATIONS 27

This document is the property of OBSTA. It may not be reproduced or communicated to third parties without the written permission of OBSTA

1. Product name and part number

1.1. Model identification

Designation	Part number (P/N)	Power supply	QR code
OFC-RI-048	113790RI-048	48 Vdc	
OFC-RI-240	113790RI-240	110-240 Vac	
OFC-RI-SOL	113790RI-SOL	12-24 Vdc	

1.2. Version history and technical developments

Although the part number remains unchanged to ensure continuity in our catalog, this product has undergone major technical improvements since February 2026.

Feature	Old version (before 2026)	Actual version
Color	Raw (gray)	Red
Enclosure	Toggle latch	X4 Captive screw M6X30
Surge protection	Model MSB10, not fixed	MLPX1 model attached to the housing
Retaining cable	Outside the beacon	Inside the beacon
Cable gland	X2 M20 and x1 M16	CEM cable gland M25, M320 and M16
GPS	GPS Card in option	GPS integrated into the electronic board (no more -G version)

This document is the property of OBSTA. It may not be reproduced or communicated to third parties without the written permission of OBSTA

1.3. FAA version

The following part numbers are products that have been tested to meet FAA standards L864 and L885. For these part numbers, the DIP switches are factory-configured to comply with the FAA standard.

	Norm	Designation	Part number (P/N)	Input
	L-864(L)	OFC-RI-048	113790RI-048-L864	048 Vdc
	L-864(L)	OFC-RI-240	113790RI-240-L864	120-240 Vac
	L-885(L)	OFC-RI-048	113790RI-048-L885	048 Vdc
	L-885(L)	OFC-RI-240	113790RI-240-L885	120-240 Vac

This document is the property of OBSTA. It may not be reproduced or communicated to third parties without the written permission of OBSTA

2. Caution

- Do not proceed with any maintenance job when the product is under operation.
- Power supply must be shut down when opening the flash-head or the cabinet.
- Installation must be performed only by an electrically skilled operator and National electrical installation rules must be respected.
- Always wear appropriate Personal Protective Equipment (PPE) when installing, maintaining, or servicing the system.
- Any installation or maintenance operation performed at height must be carried out in strict compliance with fall-protection procedures.
- Do not look directly at the projector while it is in operation: Led projectors produce brilliant flashes of lights which can result in temporary or permanent eye damage.
- OBSTA products may be affected by ESD, use state of the art precaution before manipulation.
- Unless otherwise specified, all cables must be shielded, and the shielding must be connected to ground.
- All cables connected to PCBs and terminal blocks must be equipped with a cable connector to prevent false contacts when connecting devices.

This document is the property of OBSTA. It may not be reproduced or communicated to third parties without the written permission of OBSTA

3. Warranty

OBSTA warrants the equipment described in the instruction manual and sold to purchasers to be free from defects in material and workmanship at the time of shipment. OBSTA's liability under this warranty being limited to repairing or replacing, at OBSTA's option, items which are returned to it prepaid within twenty-four (24) months from shipment to the original Purchaser, or twelve months from commissioning, and found, to OBSTA's satisfaction, to have been defective. In no event shall OBSTA be liable for consequential damages. NO PRODUCT IS WARRANTED AS BEING FIT FOR A PARTICULAR PURPOSE AND THERE IS NO WARRANTY OF MERCHANTABILITY.

This warranty applies only if: (I) the items are used solely under the operating conditions and in the manner recommended in OBSTA's instruction manual, specifications, or other literature; (II) the items have not been misused or abused in any manner or repairs attempted thereon; (III) written notice of the failure within the warranty period is forwarded to OBSTA and the directions received for properly identifying items returned under warranty are followed; and (IV) such return notice authorizes OBSTA to examine and disassemble returned products to the extent OBSTA deems necessary to ascertain the cause of failure. The warranties stated herein are exclusive.

THERE ARE NO OTHER WARRANTIES, EITHER EXPRESSED OR IMPLIED, BEYOND THOSE SET FORTH HEREIN, and OBSTA does not assume, nor does OBSTA authorize anyone else to assume for it, any other obligation or liability in connection with the sale or use of said products. OBSTA's liability on any claim of any kind, including negligence, for loss or damages arising out of or connected with the manufacture, sale, delivery, repair or use of any equipment or services provided by OBSTA shall in no case exceed the price allocable to the item or service or part thereof which gives rise to the claim.

The integrity and reliability of OBSTA aviation obstruction lighting systems is dependent on the use of OBSTA parts and components. To ensure the optimum performance and reliability of your OBSTA system, it is strongly advised that only components and modules manufactured by OBSTA be used.

This document is the property of OBSTA. It may not be reproduced or communicated to third parties without the written permission of OBSTA

4. Introduction

4.1. General information

This manual provides information about the installation, operation and maintenance of the OFC Red Medium Intensity Obstruction Lighting systems manufactured by OBSTA. The lighting systems described in this manual are medium intensity type B (red only) and FAA type L-864 and L-885 obstruction light.

Version: The OFC is sold with an optional photoresistor. If your product is equipped with a photoresistor, the tag code has a code ending in "-R."

4.2. General description

The OFC includes:

- A light flash-head with 6 luminous parts.
- A lamp holder and an interface (Cable gland + terminal connection on the PCB)

The attachment of the flash-head is done with 4 M6 screw. Waterproof is done through an O-ring between the flash-head and the lamp holder.

4.3. Operation

The OFC is an LED medium intensity system manufactured to comply with ICAO annex 14 chapter 6 and Federal Aviation Administration Advisory circular 150/5345-43J.

The operator can configure several parameters depending on how the beacon is used:

- **Master/Slave mode:** The master generates an electrical pulse (signal) for flash synchronization, and the slaves follow this signal to ensure simultaneous and coordinated operation of the equipment.
- **DTN mode**: The lamp can be used day and night with automatic switching between day, twilight and night (DTN) modes.
- **GPS synchro**: The light provides the ability to synchronize with a GPS clock, so that a flash sequence starts exactly on second 0, for example, allowing the lights to be fully independently synchronized and comply with regulations.
- **Flash duration and flash frequence**: set the operation of the lamps: fixed mode or flashing mode, night only or permanent, redundancy or simultaneous.
- **Alarm relay**: Returns real-time tag status information (NO/NC contact available). Alarm will be set when some conditions are met, depending on the configuration and switches. Free contact (relay 10A 250 Vac / 5A 30Vdc max)

This document is the property of OBSTA. It may not be reproduced or communicated to third parties without the written permission of OBSTA

4.4. Beacon

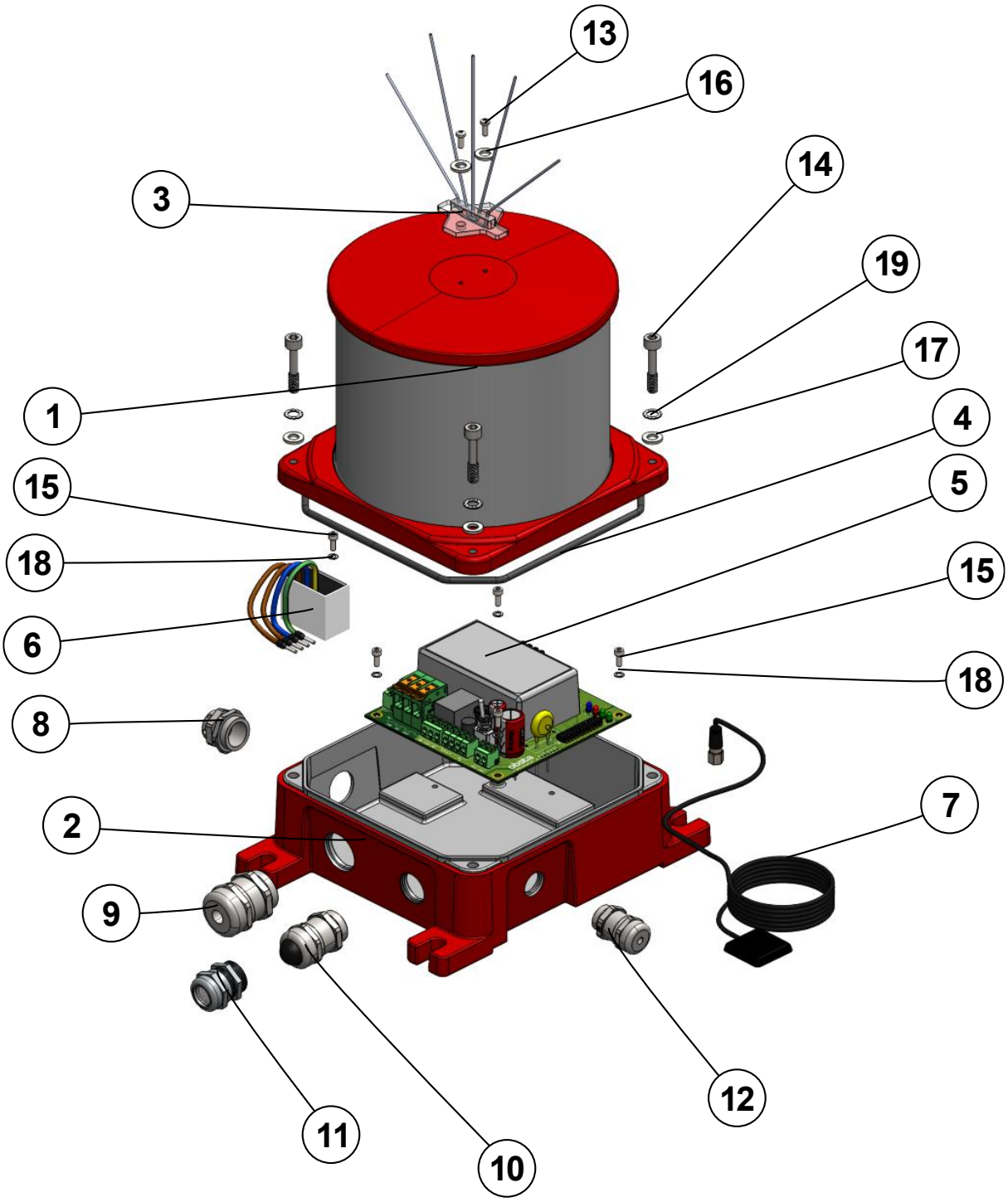

This document is the property of OBSTA. It may not be reproduced or communicated to third parties without the written permission of OBSTA

N°	Designation	OBSTA spare part	Qty
1	Flash head	113790RI-FLASH_HEAD	1
2	Base	120516	1
3	Bird spike	228476	1
4	O-ring 18		
5	PCB		
5.1	PCB-048	113790RR-CMD-048	1
5.2	PCB-240	113790RR-CMD-240	1
5.3	PCB-SOL	113970RR-CMD-SOL	1
6	Surge protection	71161489	1
7	Antenna	228152	1
8	Ventilated cable gland	228280	1
9	M25 cable gland CEM	228205	1
10	M20 cable gland CEM	228559	1
11	Photoresistor	113796	1
12	M16 cable gland CEM	228419	1
13	M3x8 Cross-recessed pan head screw	228554	2
14	M6x30 captive screw CHC	401108	4
15	M4x6 CHC screw	228183	5
16	Washer type 3	228555	2
17	Washer type 6	228375	4
18	Lock washer type 4	227553	5
19	Lock washer type 6	227543	4

This document is the property of OBSTA. It may not be reproduced or communicated to third parties without the written permission of OBSTA

5. Installation

5.1. Unpacking

Carefully unpack the product and remove any internal packing material. Examine each item for obvious physical damage. Immediately report any claims to the carrier.

It's strongly recommended to supply the product and verify that it's working properly at ground level before final installation.

Contents:

- Flash head and light body assembly.
- Bird spike + screw (to be assemble).
- Plug for M16 cable gland.
- GPS antenna (to be assembled if GPS is used), otherwise insert the plug.

5.2. Overview

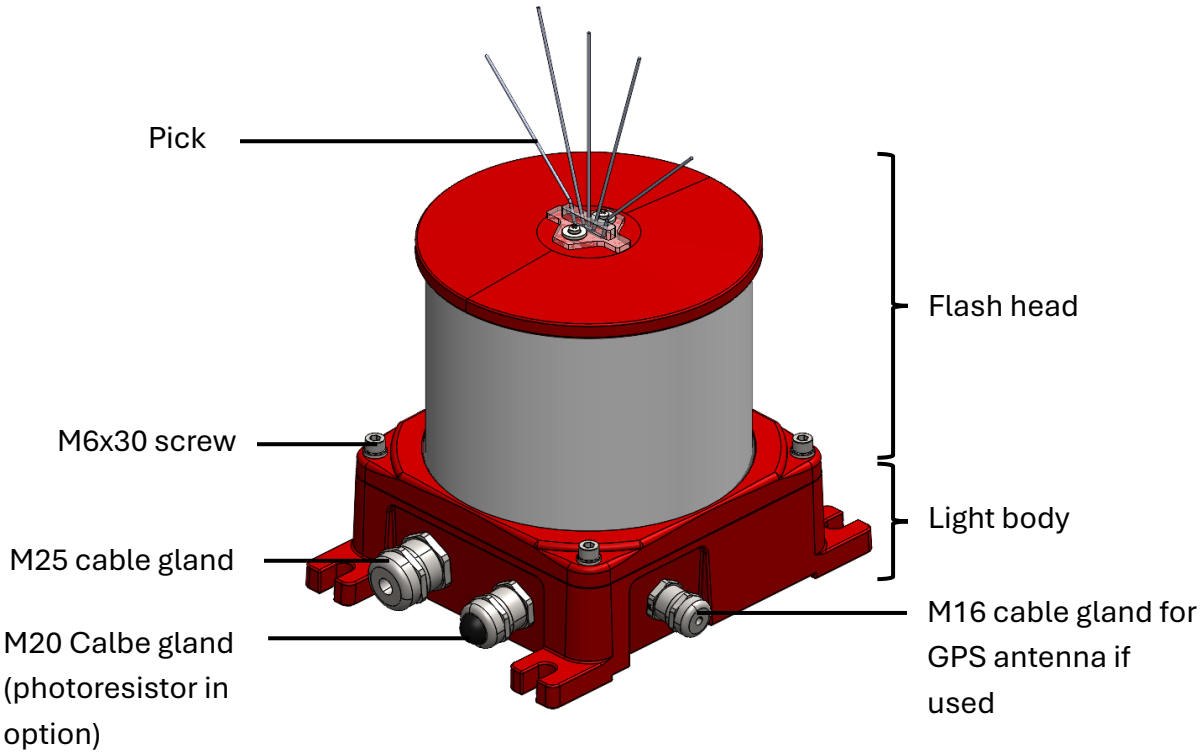

Remark: *If the OFC is equipped with a photoresistor, the beacon must be positioned so that it never obstructs or covers the photoresistor.*

This document is the property of OBSTA. It may not be reproduced or communicated to third parties without the written permission of OBSTA

5.3. Mounting

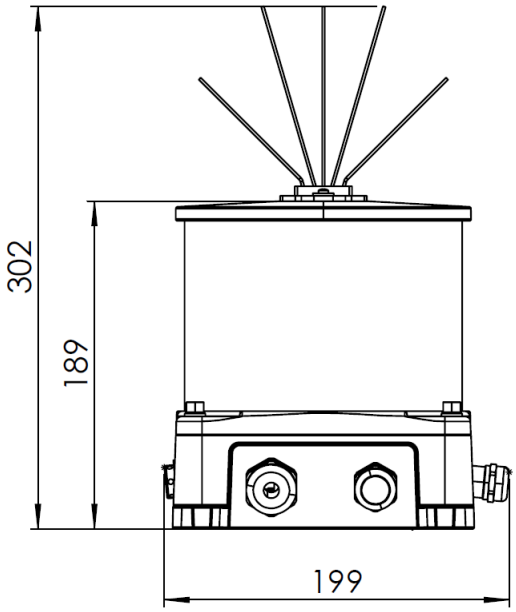

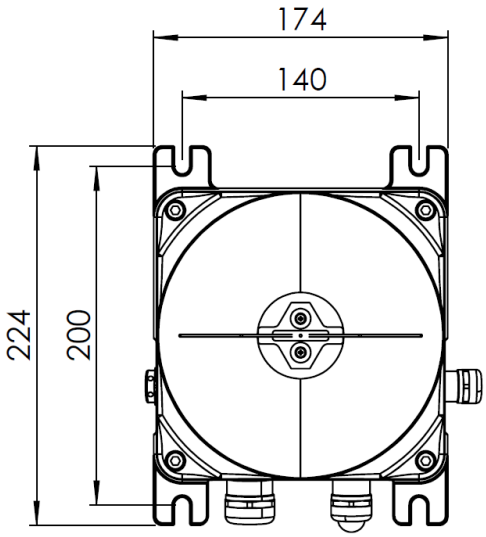

The beacon must be mounted perfectly horizontally using a spirit level to comply with the optical specifications required for aviation obstruction lights. OBSTA recommends using M8 screws with lock nuts and a tightening torque of 28 Nm for optimal tightening. It is also recommended that the metal base of the light be connected to the local tower grounding system using a grounding kit.

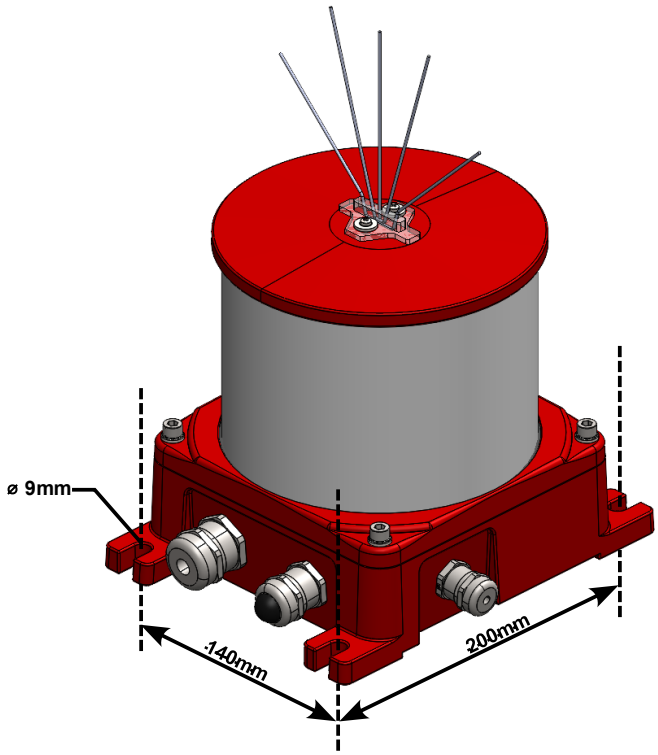

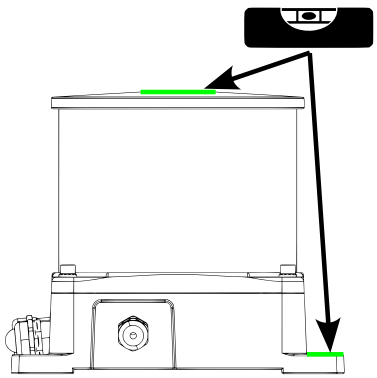

This document is the property of OBSTA. It may not be reproduced or communicated to third parties without the written permission of OBSTA

6. Wiring

6.1. Caution before wiring

- **Power OFF**: Always ensure the main power supply is completely turned off before starting any wiring work.
- **Verify voltage**: Confirm the voltage level of the circuit. Be aware of high-voltage hazards.
- **Use proper PPE**: Wear personal protective equipment (insulated gloves, safety glasses and safety shoes).
- **Secure the work area**: Ensure the aera below is cordoned off to prevent injury from falling tools or components.
- **Chek equipment ratings**: Confirm the product's voltage and current ratings match the installation circuit.
- **Inspect components**: Examine all parts (wires, connectors, terminals) for damage before wiring.
- **Proper tools**: Use insulated tools appropriate for electrical work.
- **Follow wiring diagram**: Refer to the OBSTA's schematic to ensure correct connections.
- **Grounding**: verify proper grounding/earthing for all metal parts and enclosures.
- **Secure wiring**: Fasten cable properly to prevent strain, chafing, or accidental disconnection.
- **Verify before powering**: Double check all connections before restoring power.
- **Shielded cable**: Cables must be shielded when used in electromagnetic fields.
- **Position**: The lamps shall be installed as close as possible from the command box from it using a 2x1.5mm^2 cable.
- **Number of lamps**: If more than 1 lamp is connected, all lamps must be wired in parallel.
- **Polarities**: The polarities must be correctly positioned on the DC power. If reversed, the printed circuit board may be seriously damaged.
- **Configuration:** Do not forget to set the dipswitches as required by the warning lights: Unless specified, dipswitch settings configurations are factory preset.

This document is the property of OBSTA. It may not be reproduced or communicated to third parties without the written permission of OBSTA

6.2. Card access

Unscrew the four M6x30 screws located at the four corners of the “lamp” block. Be very careful when opening the product. The interior contains wiring connecting the electronic board to the light head. Do not pull abruptly on the parts you are separating to avoid damaging these sensitive connections. Handle with care to ensure the product functions properly.

Before closing the flash head: Check the position of the O-ring in the light body before closing the flash-head. Check tightening of the four screws that close the flash-head with a torque spanner (10Nm). Incorrect tightening or positioning of the gasket can alter the tightness and cause irreversible damage to the OFD. Use a spirit level to check the light is perfectly horizontal.

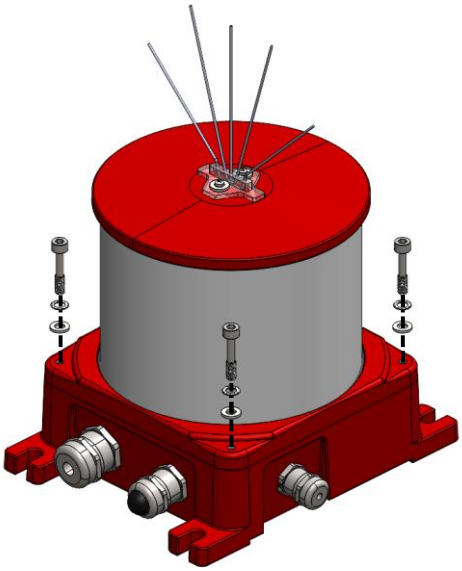

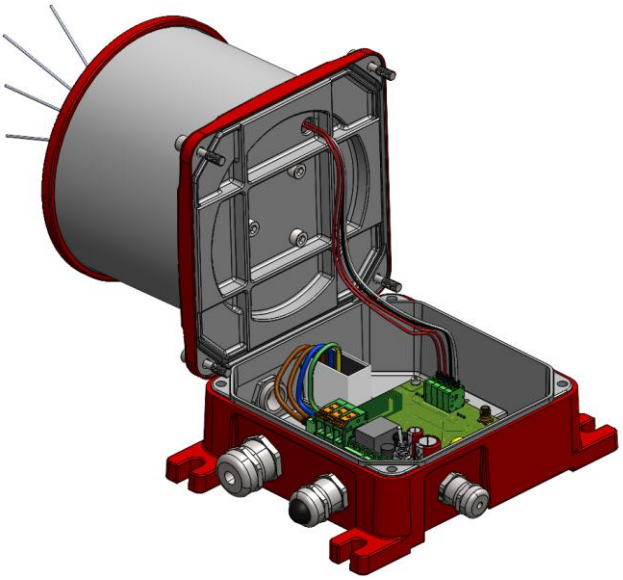

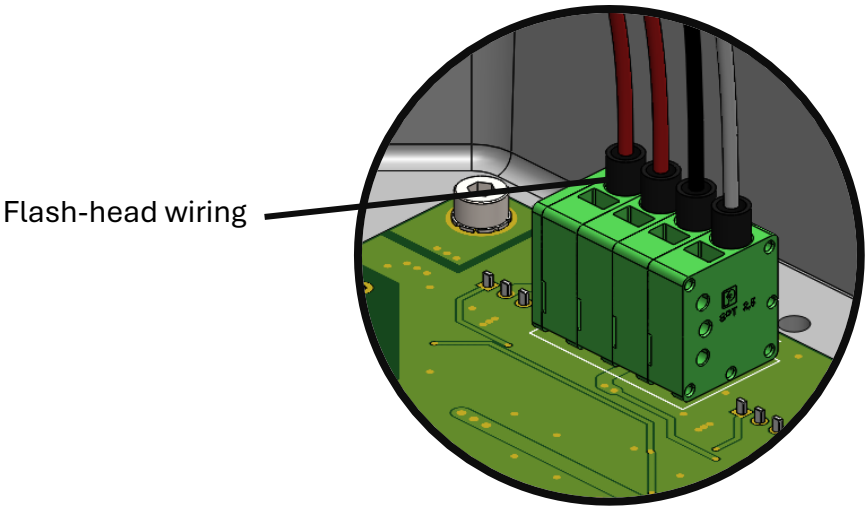

This document is the property of OBSTA. It may not be reproduced or communicated to third parties without the written permission of OBSTA

6.3. Overview

6.3.1. OFC 240, 048 and SOL

The OFC 110Vac to 240Vac is equipped with a power supply directly integrated and connected into the product casing.

OFC-RI-240 **OFC-RI-048** **OFC-RI-SOL**

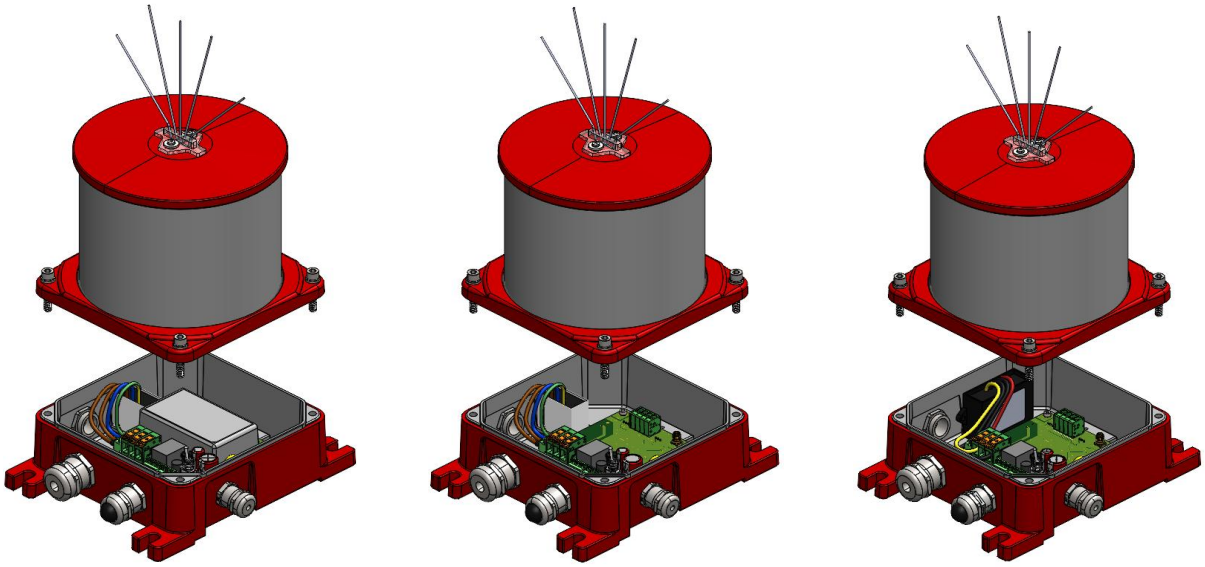

6.3.2. PCB led (lamp)

Each optical module incorporates a printed circuit board with LEDs. The layout of these diodes varies specifically according to the colorimetry of the light.

- Red only: 6 red LEDs
- Red / IR: 5 red LEDs and 1 infrared LED
- White only: 5 white LEDs

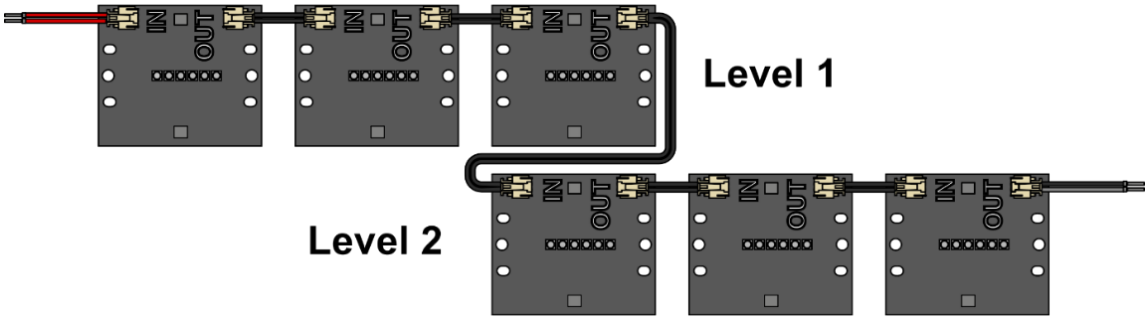

This document is the property of OBSTA. It may not be reproduced or communicated to third parties without the written permission of OBSTA

6.3.3. Internal connection diagram

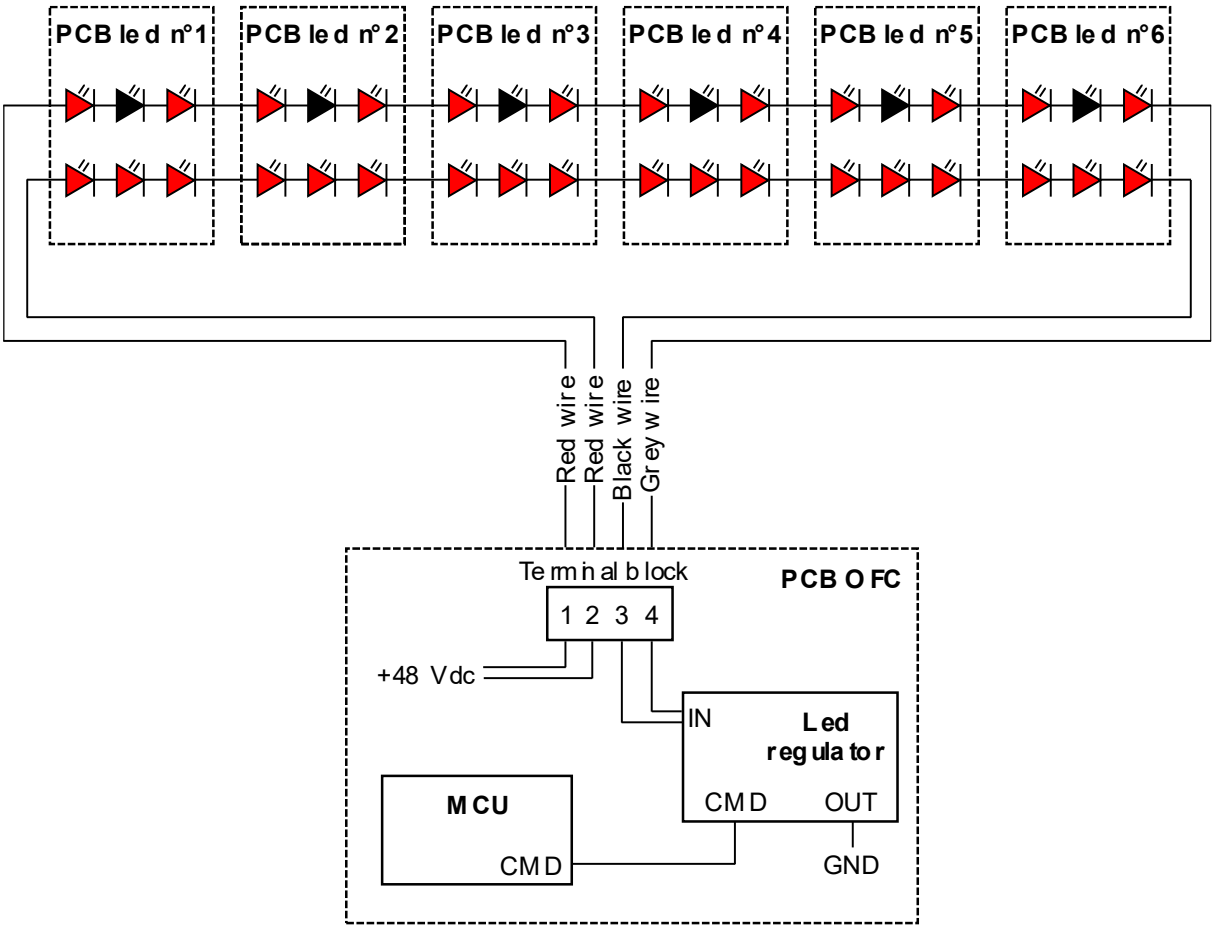

This document is the property of OBSTA. It may not be reproduced or communicated to third parties without the written permission of OBSTA

6.3.4. Main card (box)

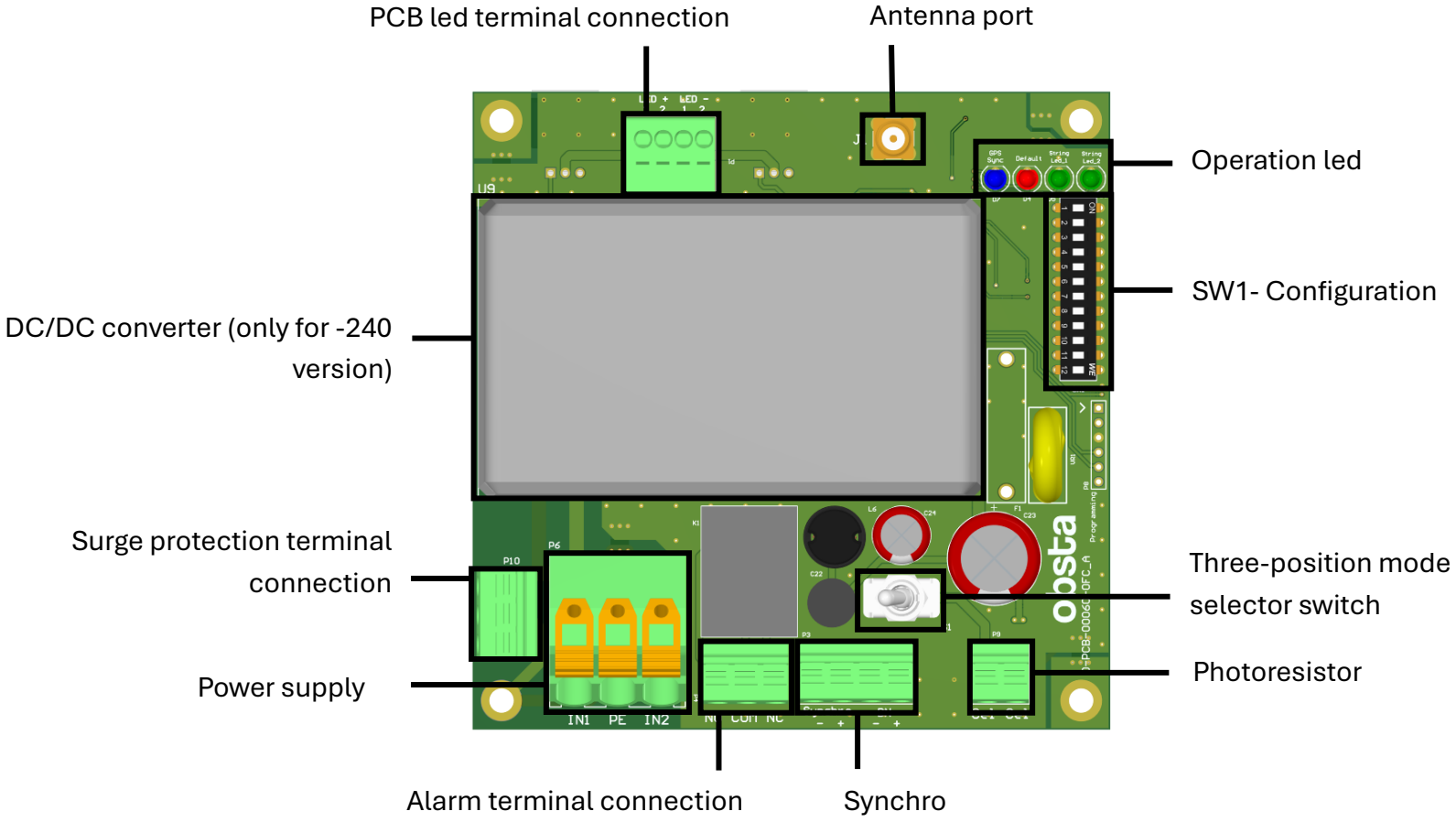

For versions 048 and 240, the surge protector box (not shown) is located to the right of the board. For SOL versions, the surge protector is replaced by a DC/DC converter (12Vdc to 48Vdc) and corresponds to the black box located to the right of the board.

This document is the property of OBSTA. It may not be reproduced or communicated to third parties without the written permission of OBSTA

6.4. Cable gland installation

As a reminder, all shielded cables must be earthed at both ends. It is the installer's responsibility to check that OBSTA cabinets and lamps are correctly wired.

- Strip excess cable length to expose shielding.
- Leave 15mm of shielding, strip the rest.

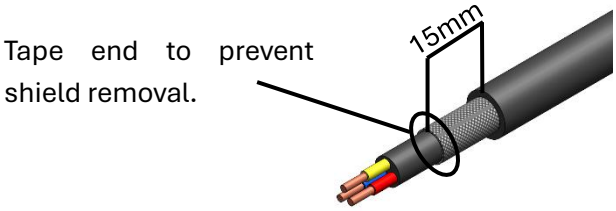

- Thread the cable through the cable gland (the ring is loosened but not removed) so that the shield is in contact with the gland springs.
- The gasket must be correctly positioned flat and in its housing for optimum sealing.

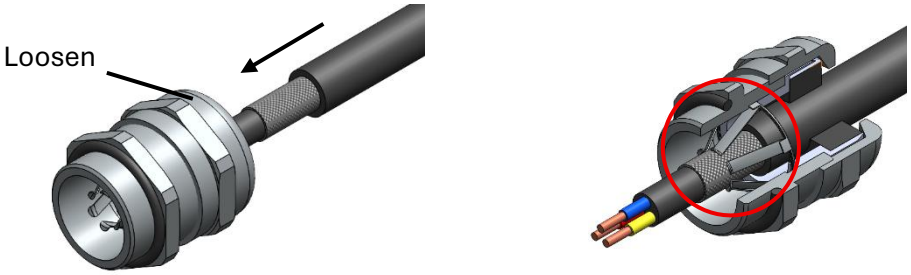

- Tighten the gland ring with the appropriate wrench.
- Once the cable has been clamped in the cable gland, cut and strip the wires to the length required to connect the terminal blocks (don't forget to fit cable ferrules before connection).

CEM	Cable diam min (mm)	Cable diam max (mm)	Pressure nut wrench	Locknut wrench
M16	4.5	10	20	20
M20	7	13	24	24
M25	9	17	29	29

This document is the property of OBSTA. It may not be reproduced or communicated to third parties without the written permission of OBSTA

6.5. Photoresistor

A photoresistor is available for item codes “-R”.

Operating principle:

- **Visual identification:** The photoresistor Is placed in the M20 cable gland
- **Role of the option:** The photoresistor allows the beacon to be switched on at nightfall and switched off at dawn.

Installation precautions:

- **Orientation:** the photocell must face north (for the northern hemisphere)
- **Exposure:** Must not be covered or placed in front of an object or obstacle that could prevent proper light capture for the photocell to function correctly.
- **Waterproofing:** The cable gland must not be loosened except for maintenance purposes, otherwise the waterproofing of the photoresistor and the beacon may be compromised.

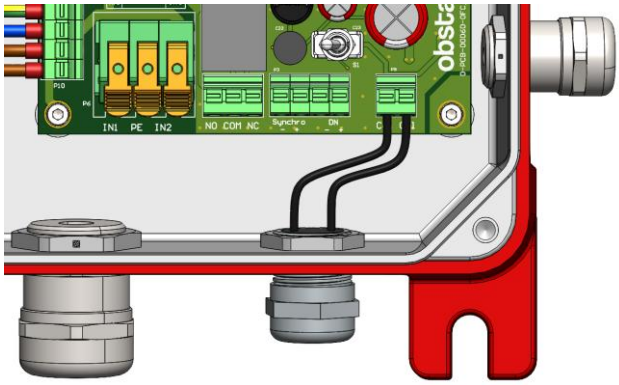

6.6. Three-position mode selector switch

This 3-position switch is used for troubleshooting. It is used to force the beacon to operate in day mode or night mode. The middle position allows the beacon to operate according to the programmed configuration.

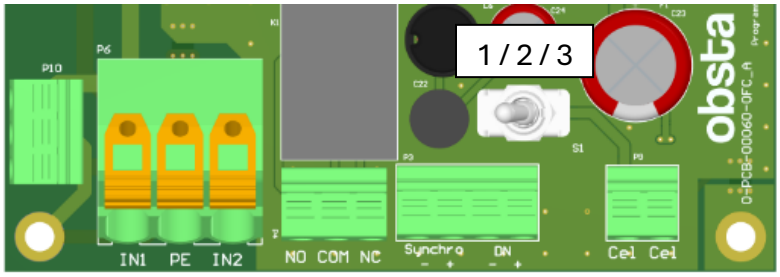

Position 1: Forces the beacon to operate in night mode.
Position 2: The beacon operates normally (depending on the SW1 setting).
Position 3: Forces the beacon to operate in day mode.

This document is the property of OBSTA. It may not be reproduced or communicated to third parties without the written permission of OBSTA

6.7. GPS antenna installation

A magnetic GPS antenna is supplied with the beacon and may be required depending on the configuration. It must be attached to the outside of the housing and remain completely unobstructed (do not cover it).

Pass the antenna cable through the cable gland, from the outside to the inside of the housing.

Then connect the cable to connector J1 on the circuit board.

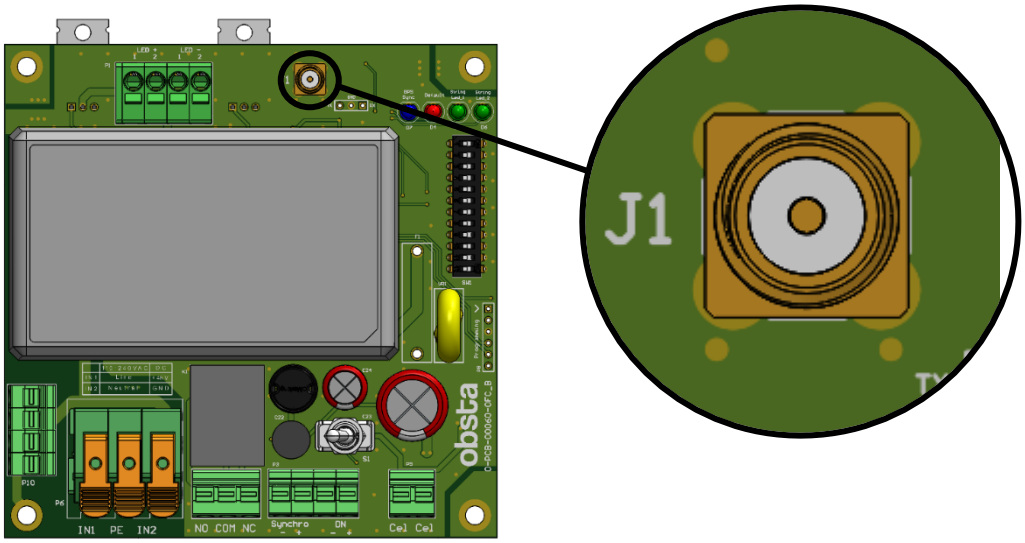

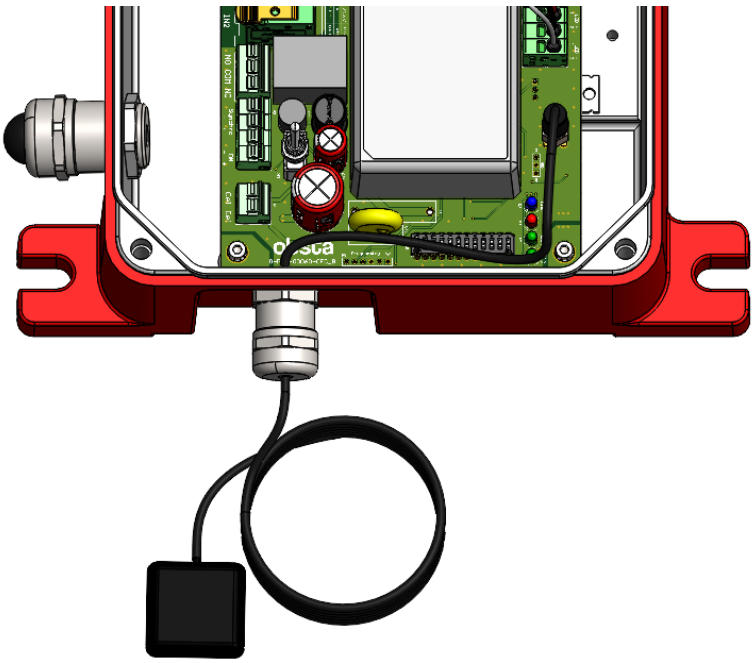

This document is the property of OBSTA. It may not be reproduced or communicated to third parties without the written permission of OBSTA

6.8. Typical wiring

The following typical wiring are provided for illustrative purposes only.

OFC 110 Vac to 240 Vac

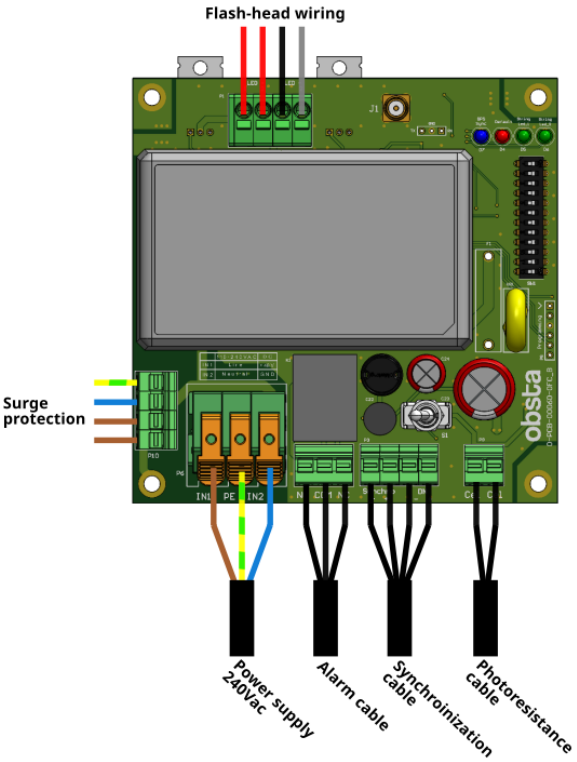

OFC 48Vdc

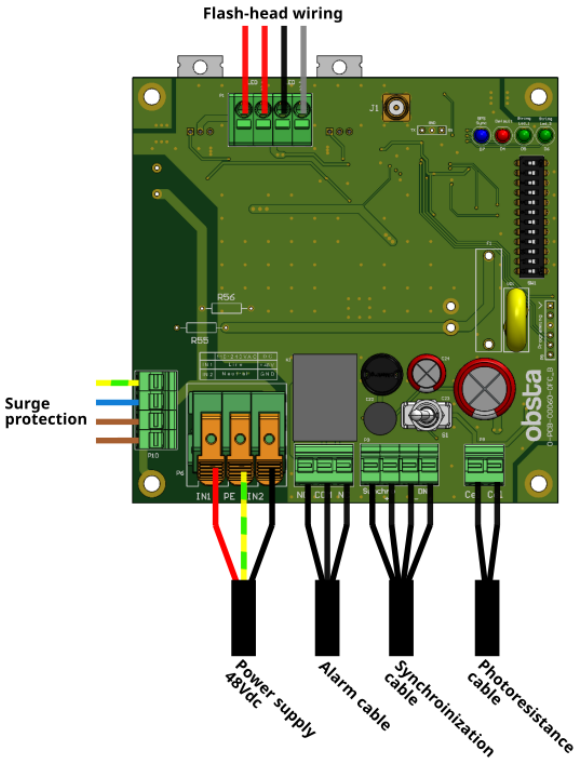

OFC SOL

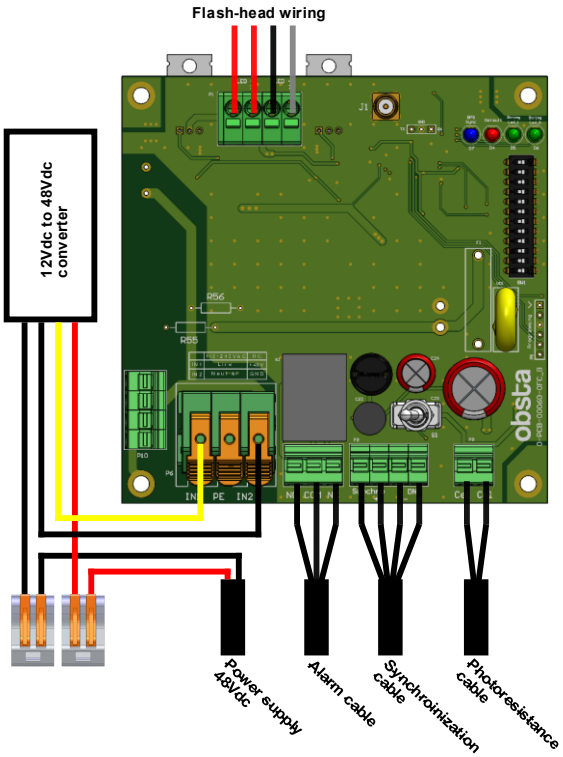

This document is the property of OBSTA. It may not be reproduced or communicated to third parties without the written permission of OBSTA

7. Startup and configuration

7.1. Power-up

Before turning on the power, ensure that all electrical connections are properly made and that the supply voltage matches the product specifications. Check that the wiring is secure and that there are no bare wires or conductive elements that could cause a short circuit.

At startup, the program is in the initialization phase for 3 seconds. During this phase:

- The lamps on level 1 and level 2 are off.
- The relay is active.
- The signaling led and the lane leds are on.

7.2. Configuration

All switches are factory set for use according to user requirements. Any changes to the dipswitchs settings must be made with OBSTA's approval. For reference, "-R" models are tags equipped with a photoresistor option.

The beacon incorporates a GPS (G in the table) synchronized with an astronomical clock. Using the geographical position and UTC time provided by satellites, the system automatically calculates sunrise and sunset times. It then autonomously adjusts the light intensity and transmission mode according to the time of day, dusk and night, without relying on an external light sensor.

7.2.1. SW1

SW1					
N°	1	2	3	4	5 to 12
ON (I)	Nominal	Master	Override level 1	Override level 2	Configuration of the light
OFF (0)	Reset	Slave	-	-	Configuration of the light

Nominal / Reset: Switch to reset the light an alarm (to be used only for maintenance)

Master / Slave: The master generates the control and synchronization signal, and the slaves follow this signal to ensure simultaneous and coordinated operation of the equipment. Master mode is the factory set mode.

Override level 1: Force led circuit on level 1 or 2 to operate (bypass defaults)

Override level 2: Force led circuit on level 1 or 2 to operate (bypass defaults)

This document is the property of OBSTA. It may not be reproduced or communicated to third parties without the written permission of OBSTA

Configuration of the light: Setting of the program inside the card on a binary code, 5 being the least significant bit and 12 being the most significant bit and ***MUST NOT BE MODIFIED WITHOUT OBSTA'S CONSENT.***

Predefined configurations:

The table below defines the most used configurations. If your installation requires a specific configuration, please contact OBSTA.

Config number	Dipswitch position (5 to 12)	Norm	Type	First circuit (level 1)			Second circuit (level 2)			Interface(s) used*
				Role	Flash duration (ms)	FPM	Role	Flash duration (ms)	FPM	
3	11000000	ICAO	B	Day	200	20	Backup	200	20	G
7	11100000	ICAO	B	Night	200	20	Backup	200	20	R
8	00010000	ICAO	B	Night	200	20	Backup	200	20	RG
9	10010000	ICAO	B	Night	200	20	Backup	200	20	G
10	01010000	ICAO	B	Day	200	20	Backup	200	20	
11	11010000	ICAO	B	Day	200	20	Backup	200	20	G
12	00110000	ICAO	B	Night	1000	20	Backup	1000	20	R
13	10110000	ICAO	B	Night	1000	20	Backup	1000	20	RG
14	01110000	ICAO	B	Night	1000	20	Backup	1000	20	G
15	11110000	ICAO	B	Day	1000	20	Backup	1000	20	
16	00001000	ICAO	B	Day	1000	20	Backup	1000	20	G
17	10001000	ICAO	B	Night	600	30	Backup	600	30	R
18	01001000	ICAO	B	Night	600	30	Backup	600	30	RG
19	11001000	ICAO	B	Night	600	30	Backup	600	30	G
20	00101000	ICAO	B	Day	600	30	Backup	600	30	
21	10101000	ICAO	B	Day	600	30	Backup	600	30	G
22	01101000	ICAO	B	Night	500	40	Backup	500	40	R
23	11101000	ICAO	B	Night	500	40	Backup	500	40	RG
24	00011000	ICAO	B	Night	500	40	Backup	500	40	G
25	10011000	ICAO	B	Day	500	40	Backup	500	40	
26	01011000	ICAO	B	Day	500	40	Backup	500	40	G
27	11011000	ICAO	B	Night	330	60	Backup	330	60	R
28	00111000	ICAO	B	Night	330	60	Backup	330	60	RG
29	10111000	ICAO	B	Night	330	60	Backup	330	60	G
30	01111000	ICAO	B	Day	330	60	Backup	330	60	
31	11111000	ICAO	B	Day	330	60	Backup	330	60	G
32	00000100	L-864 + ICAO	B	Night	255	30	Nuit	255	30	R
33	10000100	L-864 + ICAO	B	Night	255	30	Nuit	255	30	G
34	01000100	L-864 + ICAO	B	Day	255	30	Day	255	30	
35	11000100	L-864 + ICAO	B	Day	255	30	Day	255	30	G
37	10100100	L-864 + ICAO	B	Night	255	30	Nuit	255	30	RG
46	01110100	L-864 + ICAO	B	Night	255	30	Night	255	30	
47	11110100	L-864 + ICAO	B	Night	255	30	Night	255	30	G
78	01110010	ICAO	C	Day			Day			
79	11110010	ICAO	C	Night			Day			
80	00001010	ICAO	C	Night			Night			R
81	10001010	ICAO	C	Night			Night			G
91	11011010	L-885 + ICAO	B	Night	255	60	Night	255	60	R
92	00111010	L-885 + ICAO	B	Night	255	60	Night	255	60	G
93	10111010	L-885 + ICAO	B	Day	255	60	Day	255	60	
94	01111010	L-885 + ICAO	B	Day	255	60	Day	255	60	G
95	11111010	L-885 + ICAO	B	Night	255	60	Night	255	60	RG
96	00000110	L-885 + ICAO	B	Night	255	60	Night	255	60	
97	10000110	L-885 + ICAO	B	Night	255	60	Night	255	60	G

**G (GPS), R (photoresistor), RG (GPS and photoresistor)*

This document is the property of OBSTA. It may not be reproduced or communicated to third parties without the written permission of OBSTA

ICAO MI type B, 20 FPM configuration low power consumption

- N° 3: Without alarm contact activated with GPS flash synchronization (configuration dedicated to OBSTA solar kit)

ICAO MI type B, 20 FPM configuration

- N°7: Photoresistor used for night lighting
- N°8: Photoresistor used for night lighting and GPS for flash synchronization
- N°9: GPS used for flash synchronization only and external 0/+48Vdc signal used for night lighting.
- N°10: Operates day and night
- N°11: GPS used for flash synchronization only

ICAO MI type B, dedicated to wind turbine configuration (flash duration equal to 1/3 of the period)

- N°12: Photoresistor used for night lighting
- N°13: Photoresistor used for night lighting and GPS for flash synchronization
- N°14: GPS used for flash synchronization
- N°15: Daytime operation
- N°16: GPS used for flash synchronization
- N°17: Photoresistor used for night lighting
- N°18: Photoresistor used for night lighting and GPS for flash synchronization
- N°19: GPS used for flash synchronization
- N°20: Daytime operation
- N°21: GPS used for flash synchronization
- N°22: Photoresistor used for night lighting
- N°23: Photoresistor used for night lighting and GPS for flash synchronization
- N°24: GPS used for flash synchronization
- N°25: Daytime operation
- N°26: GPS used for flash synchronization
- N°27: Photoresistor used for night lighting
- N°28: Photoresistor used for night lighting and GPS for flash synchronization
- N°29: GPS used for flash synchronization
- N°30: Daytime operation
- N°31: GPS used for flash synchronization

This document is the property of OBSTA. It may not be reproduced or communicated to third parties without the written permission of OBSTA

ICAO and FAA MI type B et FAA L-864 with IR configuration

- N° 32: Photoresistor used for night lighting
- N°33: GPS used for flash and lighting synchronization
- N°34: Day and night operation
- N°35: GPS used for flash synchronization only
- N°37: Photoresistor used for night lighting and GPS for flash synchronization
- N°46: External 0/+48Vdc signal used for night lighting
- N°47: GPS used for flash synchronization only and external 0/+48Vdc signal used for night lighting

ICAO MI type C (steady red) with IR configuration

- N°78: Day and night operation
- N° 79: External 0/+48Vdc signal used for night lighting
- N°80: Photoresistor used for night lighting
- N° 81: GPS used for night lighting

7.3. Operation led

The board is equipped with four LEDs positioned on the top side of it. These visual indicators are used to provide the user with immediate feedback on the operational status of the system and to signal any default conditions via specific flashing sequences.

7.3.1. “GPS sync” led

The indication LED D7 “GPS sync” lights up and remains steady 10 minutes after the beacon is powered on. This means that the beacon is properly synchronized.

Note: *depending on the GPS chip version, once synchronization is achieved, the blue LED may emit a blink at a frequency of 1 Hz.*

This document is the property of OBSTA. It may not be reproduced or communicated to third parties without the written permission of OBSTA

7.3.2. "Default" led

The D4 "default" led emits a red flashing sequence in case of default. The sequences are ranked in order of priority:

Default	Condition	Red led signal	Lamp signal impact
Clock configuration error	The system did not switch to external oscillator	200ms blinking simultaneously of all the leds	-
Supply voltage problem	Over or under voltage	· · · · · · · Short signal	-
Configuration error	The configuration selected on the dipswitches is not valid.	— · · · 1 long 3 short	-
Slave synchronization	The lamp is slave and the level sequence active	— · 1 long 1 short	-
GPS signal	The light is master and the active runway sequence is not a continuous flash. GPS synchronization is required and: • The GPS signal has never been validated. • The last valid GPS signal is older than 15 minutes. • The PCB is an earlier version, and the GPS signal is invalid.	— · · 1 long and 2 short	15 FPM
Failing photoresistor	The day/night parameter of the active configuration indicates photoresistor, and there is no day/night change for 48 consecutive hours.	— — — — Long signal	15 FPM
GPS in progress	The beacon has lost the GPS for less than 15 minutes; If no signal is found after 15 minutes, the beacon will switch to default GPS signal mode.	Same as the flash-head	-

7.3.3. "String Led" signal

The two green indicators, "String Led_1" and "String Led_2" (D5 and D6), show the lamp blink in synchronization with the light head. These indicators visually represent the current flash sequence, allowing real-time monitoring of the head's status and timing. Each blink of the indicator corresponds exactly to a flash emitted by the lamp, providing a reliable indication of the active sequence.

This document is the property of OBSTA. It may not be reproduced or communicated to third parties without the written permission of OBSTA

8. Maintenance

8.1. Annual visit

Test	Frequency	Preventive action	Risk
Aspect (rust, dust…)	Annual	Exterior cleaning Check the condition of the lamp head glass	Malfunction
Clamping	Annual	Checking tightness	Lamp falling Tightness degradation
Wiring	Annual	Visual control Tightening cable glands Tightening PCB wire	Cable damage Poor electrical contact Short circuits
Waterproof	Annual	Lamp visual verification	Water infiltration Short circuit Lamp off
Light performance	Annual	External verification Clean beacon Check lamp default	Poor brightness Lamp in fault mode

8.2. Spare part

- Flash head OFC **113790RI-FLASH_HEAD**
- PCB OFC 048 **113790RR-CMD-048**
- PCB OFC 240 **113790RR-CMD-240**
- PCB OFC SOL **113970RR-CMD-SOL**
- Photoresistor **113796**
- Converter DC/DC LY-KREE12481.5 **770209**
- GPS antenna ANT-GPSC-SMA **228152**
- OFC Fuse **2407DI**

This document is the property of OBSTA. It may not be reproduced or communicated to third parties without the written permission of OBSTA

9. Technical specifications

Light output (standard configuration)

Designation	Min	Nominal	Max	Unit
Flash rate	20	30	60	*FPM*
Flash rate (FAA)	-	30	-	*FPM*
Beam pattern (Vertically)	3	-	-	°
Day luminosity ± 25%	1500	2000	2500	*Cd*
Night luminosity ± 25%	1500	2000	2500	*Cd*
Flash duration day	200	-	Continuous	*ms*
Flash duration day (FAA)	-	255	-	*ms*
Flash duration night	200	-	Continuous	*ms*
Flash duration night (FAA)	-	255	-	*ms*

Electrical input for 48 Vdc

Designation	Min	Nominal	Max	Unit
DC power input voltage	43	48	53	Vdc
Max current	-	-	0.5	A
Max current FAA	-	-	1.2	A
Average power consumption	-	-	4	W
Average power consumption (FAA)	-	-	10	W
Average power consumption (steady)	-	-	30	W
Voltage for signal (synchro, night, twilight)	30	48	55	Vdc

*This value corresponds to the minimum set by the ICAO, but it depends on the configuration chosen.

Electrical input for 120-240 Vac

Designation	Min	Nominal	Max	Unit
AC power input voltage	110	120/240	264	Vac
AC frequency	47	50/60	63	Hz
DC output voltage for the flash-head	-	48	-	Vdc
Max current	-	-	0.1	A
Max current FAA	-	-	0.25	A
Average power consumption with 20fpm – 200ms)	-	-	4	W
Average power consumption FAA	-	-	10	W
Average consumption (steady)	-	-	30	W
Voltage for signal (synchro, night, twilight)	30	48	55	Vdc

Mechanical properties

Designation	Min	Nominal	Max	Unit
Mass of the beacon	-	5	-	kg
Max wind force under 320 km/h	-	70	-	N
Dimension	-	199 x 200 x 302	-	mm

Operating environment

Designation	Min	Nominal	Max	Unit
Working temperature	-40	20	55	°C
Relative humidity	5	-	95	%

This document is the property of OBSTA. It may not be reproduced or communicated to third parties without the written permission of OBSTA