O-MAN-00016-BAT

USER MANUAL

OBSTA supply unit

48V-BAT-24Ah // 113954B

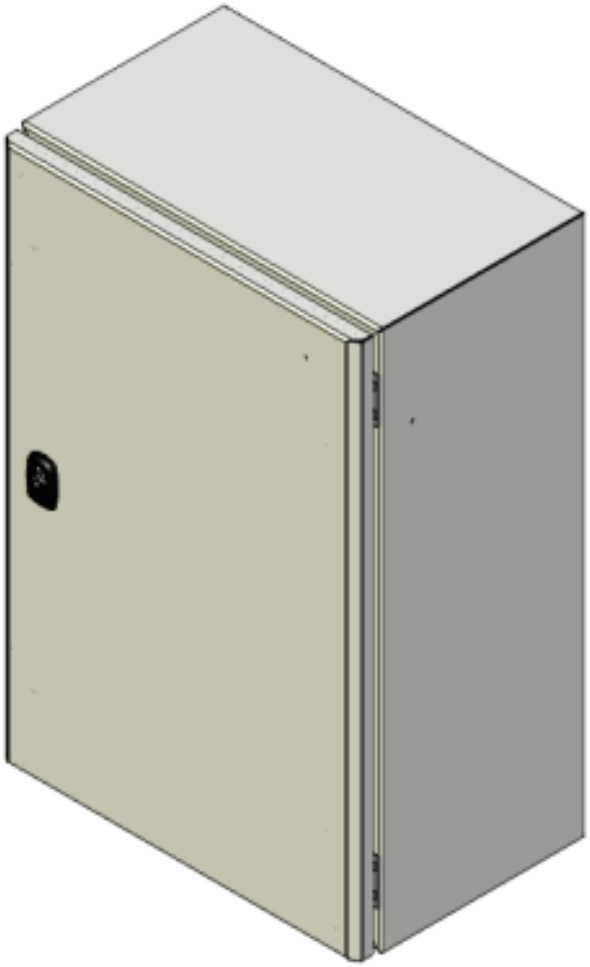

www.obsta.com

1. PRODUCT NAME AND PART NUMBER 3
2. CAUTION 4
3. WARRANTY 5
4. INTRODUCTION 6
4.1. SCOPE 6
4.2. GENERAL DESCRIPTION 6
4.3. DIMENSION 6
4.4. BILL OF MATERIALS 7
4.5. POWER SUPPLY SPECIFICATIONS 9
5. WIRING 10
5.1. INTERNAL WIRING 10
5.2. BATTERY 11
5.3. PHOTOCELL (OPTION) 12
5.4. ELECTRICAL DIAGRAM 13
6. MAINTENANCE 14
6.1. ANNUAL VISIT 14
7. APPENDIX 15
7.1. BATTERY SPECIFICATIONS (AMC9022) 15

This document is the property of OBSTA. It may not be reproduced or communicated to third parties without the written permission of OBSTA

1. Product name and part number

Description	Part number (P/N)	Power supply	QR code
48V-BAT-24Ah	113954B	48Vdc +5% -15% 24Ah (C20)	

This document is the property of OBSTA. It may not be reproduced or communicated to third parties without the written permission of OBSTA

2. Caution

- Do not proceed with any maintenance job when the product is under operation.
- Power supply must be shut down when opening the flash-head or the cabinet.
- Installation must be performed only by an electrically skilled operator, and National electrical installation rules must be respected.
- Always wear appropriate Personal Protective Equipment (PPE) when installing, maintaining or servicing the system.
- Any installation or maintenance operation performed at height must be carried out in strict compliance with fall-protection procedures.
- Do not look directly at the projector while it is in operation: Led projectors produce brilliant flashes of lights which can result in temporary or permanent eye damage.
- OBSTA products may be affected by ESD, use state of the art precaution before manipulation.
- Unless otherwise specified, all cables must be shielded, and the shielding must be connected to ground.
- All cables connected to PCBs and terminal blocks must be equipped with a cable connector to prevent false contacts when connecting devices.

This document is the property of OBSTA. It may not be reproduced or communicated to third parties without the written permission of OBSTA

3. Warranty

OBSTA warrants the equipment described in the instruction manual and sold to purchasers to be free from defects in material and workmanship at the time of shipment. OBSTA's liability under this warranty being limited to repairing or replacing, at OBSTA's option, items which are returned to it prepaid within twenty-four (24) months from shipment to the original Purchaser, or twelve months from commissioning, and found, to OBSTA's satisfaction, to have been defective. In no event shall OBSTA be liable for consequential damages. NO PRODUCT IS WARRANTED AS BEING FIT FOR A PARTICULAR PURPOSE AND THERE IS NO WARRANTY OF MERCHANTABILITY.

This warranty applies only if: (I) the items are used solely under the operating conditions and in the manner recommended in OBSTA's instruction manual, specifications, or other literature; (II) the items have not been misused or abused in any manner or repairs attempted thereon; (III) written notice of the failure within the warranty period is forwarded to OBSTA and the directions received for properly identifying items returned under warranty are followed; and (IV) such return notice authorizes OBSTA to examine and disassemble returned products to the extent OBSTA deems necessary to ascertain the cause of failure. The warranties stated herein are exclusive.

THERE ARE NO OTHER WARRANTIES, EITHER EXPRESSED OR IMPLIED, BEYOND THOSE SET FORTH HEREIN, and OBSTA does not assume, nor does OBSTA authorize anyone else to assume for it, any other obligation or liability in connection with the sale or use of said products. OBSTA's liability on any claim of any kind, including negligence, for loss or damages arising out of or connected with the manufacture, sale, delivery, repair or use of any equipment or services provided by OBSTA shall in no case exceed the price allocable to the item or service or part thereof which gives rise to the claim.

The integrity and reliability of OBSTA aviation obstruction lighting systems is dependent on the use of OBSTA parts and components. To ensure the optimum performance and reliability of your OBSTA system, it is strongly advised that only components and modules manufactured by OBSTA be used.

This document is the property of OBSTA. It may not be reproduced or communicated to third parties without the written permission of OBSTA

4. Introduction

4.1. Scope

The OBSTA power supply unit ensures power supply to the light heads in the event of a power cut.

4.2. General description

The steel cabinet is connected to a 240Vac power supply, and contains input and output overvoltage protection, as well as 4 batteries to keep OBSTA lamps running for up to 12 hours in the event of a power supply.

4.3. Dimension

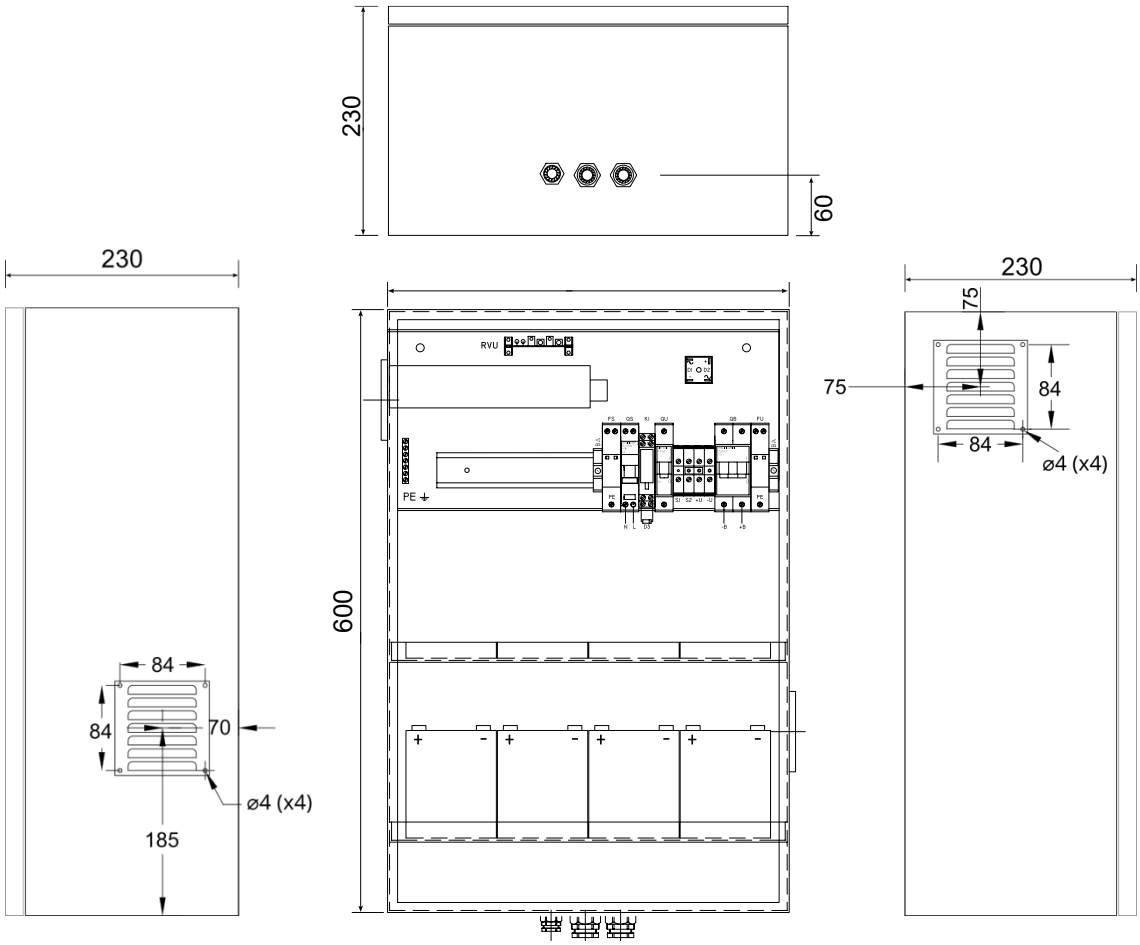

This document is the property of OBSTA. It may not be reproduced or communicated to third parties without the written permission of OBSTA

4.4. Bill of materials

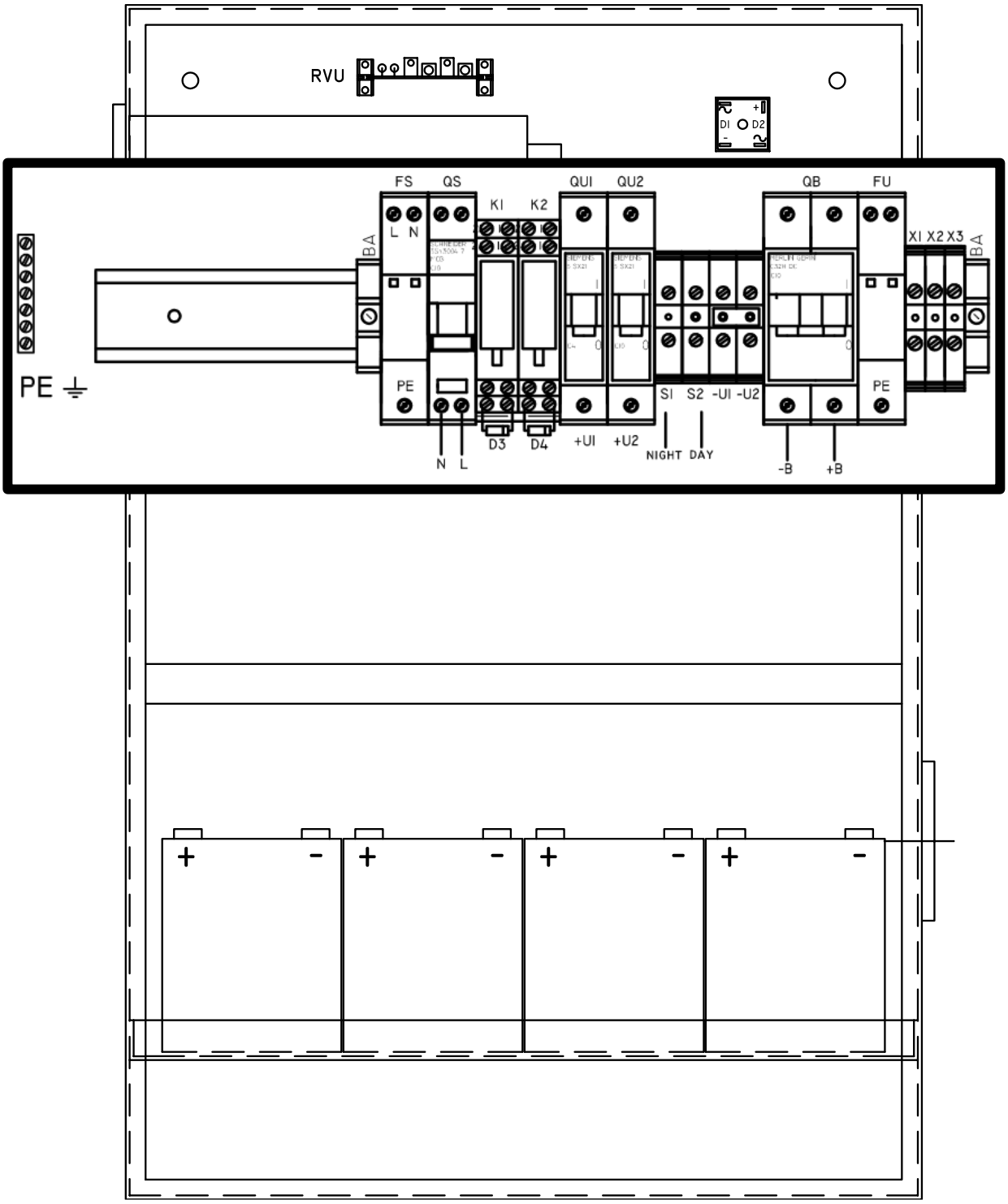

This document is the property of OBSTA. It may not be reproduced or communicated to third parties without the written permission of OBSTA

Reference	Designation	OBSTA P/N	Qty
PE	Grounding bar		1
UI	Panel mount AC/DC Power supply	113956-U1	1
A1	RVU card 1521-3	113956-RVU	1
B	Battery 24Ah (C20)	228644	4
D1-D2	Bridge rectifier	113956-DB	1
FS	DS215-230/G – surge protection		1
FU	DS230-48DC - surge protection		1
D3-D4	Diode	114008-91	2
K1-K2	48V relay	113956-RELAY	2
QU1	Circuit breaker 1P C4		1
QU2	Circuit breaker 1P C10		1
QB	Circuit breaker 2P C10		1
QS	Circuit breaker 2P C6		1
X1-X2-X3	Terminal block ZS6		3
U1-U2	Terminal block ZS16		2
S1-S2	Terminal block ZS16		2
BA	Stop blocks BAM3		2
PE1-PE4-PE5	Cable gland PG11		3
PE3	Cable gland PG13		1
PE2	Cable gland PG21		1
SA	Square ventilation grid 100x100		2
-	Cabinet		1
-	DIN rail		1
-	4x10 rivet pop		8
-	ICAO label 57x27		1

This document is the property of OBSTA. It may not be reproduced or communicated to third parties without the written permission of OBSTA

4.5. Power supply specifications

MODEL		HRP-300-3.3	HRP-300-5	HRP-300-7.5	HRP-300-12	HRP-300-15	HRP-300-24	HRP-300-36	HRP-300-48
OUTPUT	DC VOLTAGE	3.3V	5V	7.5V	12V	15V	24V	36V	48V
	RATED CURRENT	60A	60A	40A	27A	22A	14A	9A	7A
	CURRENT RANGE	0 ~ 60A	0 ~ 60A	0 ~ 40A	0 ~ 27A	0 ~ 22A	0 ~ 14A	0 ~ 9A	0 ~ 7A
	RATED POWER	198W	300W	300W	324W	330W	336W	324W	336W
	RIPPLE & NOISE (max.) Note.2	80mVp-p	90mVp-p	100mVp-p	120mVp-p	150mVp-p	150mVp-p	250mVp-p	250mVp-p
	VOLTAGE ADJ. RANGE	2.8 ~ 3.8V	4.3 ~ 5.8V	6.8 ~ 9V	10.2 ~ 13.8V	13.5 ~ 18V	21.6 ~ 28.8V	28.8 ~ 39.6V	40.8 ~ 55.2V
	VOLTAGE TOLERANCE Note.3	±2.5%	±2.0%	±2.0%	±1.0%	±1.0%	±1.0%	±1.0%	±1.0%
	LINE REGULATION	±0.5%	±0.5%	±0.5%	±0.3%	±0.3%	±0.2%	±0.2%	±0.2%
	LOAD REGULATION	±1.0%	±1.0%	±1.0%	±0.5%	±0.5%	±0.5%	±0.5%	±0.5%
	SETUP, RISE TIME	1000ms, 50ms/230VAC 2500ms, 50ms/115VAC at full load							
	HOLD UP TIME (Typ.)	16ms/230VAC 16ms/115VAC at full load							
INPUT	VOLTAGE RANGE Note.5	85 ~ 264VAC 120 ~ 370VDC							
	FREQUENCY RANGE	47 ~ 63Hz							
	POWER FACTOR (Typ.)	PF>0.95/230VAC PF>0.99/115VAC at full load							
	EFFICIENCY (Typ.)	80%	82%	86%	88%	88%	87%	88%	89%
	AC CURRENT (Typ.)	3.5A/115VAC 1.8A/230VAC							
	INRUSH CURRENT (Typ.)	35A/115VAC 70A/230VAC							
	LEAKAGE CURRENT	<1.2mA / 240VAC							
PROTECTION	OVERLOAD	105 ~ 135% rated output power							
		Protection type : Constant current limiting, recovers automatically after fault condition is removed							
	OVER VOLTAGE	3.96 ~ 4.62V	6 ~ 7V	9.4 ~ 10.9V	14.4 ~ 16.8V	18.8 ~ 21.8V	30 ~ 34.8V	41.4 ~ 48.6V	57.6 ~ 67.2V
		Protection type : Shut down o/p voltage, re-power on to recover							
	OVER TEMPERATURE	Shut down o/p voltage, recovers automatically after temperature goes down							
FUNCTION	DC OK SIGNAL	PSU turns on : 3.3 ~ 5.6V ; PSU turns off : 0 ~ 1V							
	FAN CONTROL (Typ.)	Load 35±15% or RTH2≧50℃ Fan on							
ENVIRONMENT	WORKING TEMP.	-40 ~ +70℃ (Refer to "Derating Curve")							
	WORKING HUMIDITY	20 ~ 90% RH non-condensing							
	STORAGE TEMP., HUMIDITY	-40 ~ +85℃ , 10 ~ 95% RH							
	TEMP. COEFFICIENT	±0.03%/℃ (0 ~ 50℃)							
	VIBRATION	10 ~ 500Hz, 5G 10min./1cycle, 60min. each along X, Y, Z axes							
SAFETY & EMC (Note 4)	SAFETY STANDARDS	UL62368-1, TUV BS EN/EN62368-1, EAC TP TC 004, AS/NZS 62368.1 approved							
	WITHSTAND VOLTAGE	I/P-O/P:3KVAC I/P-FG:2KVAC O/P-FG:0.5KVAC							
	ISOLATION RESISTANCE	I/P-O/P, I/P-FG, O/P-FG:100M Ohms / 500VDC / 25℃ / 70% RH							
	EMC EMISSION	Compliance to BS EN/EN55032 (CISPR32) Class B, BS EN/EN61000-3-2,-3, EAC TP TC 020							
	EMC IMMUNITY	Compliance to BS EN/EN61000-4-2,3,4,5,6,8,11,BS EN/EN55035,BS EN/EN61000-6-2,heavy industry level,EAC TP TC 020							
OTHERS	MTBF	1487.1K hrs min. Telcordia SR-332 (Bellcore) ; 200.4K hrs min. MIL-HDBK-217F (25℃)							
	DIMENSION	199*105*41mm (L*W*H)							
	PACKING	0.95Kg;15pcs/15.3Kg/0.79CUFT							
NOTE	1. All parameters NOT specially mentioned are measured at 230VAC input, rated load and 25℃ of ambient temperature. 2. Ripple & noise are measured at 20MHz of bandwidth by using a 12" twisted pair-wire terminated with a 0.1 μF & 47 μF parallel capacitor. 3. Tolerance : includes set up tolerance, line regulation and load regulation. 4. The power supply is considered a component which will be installed into a final equipment. All the EMC tests are been executed by mounting the unit on a 360mm*360mm metal plate with 1mm of thickness. The final equipment must be re-confirmed that it still meets EMC directives. For guidance on how to perform these EMC tests, please refer to "EMI testing of component power supplies." (as available on https://www.meanwell.com//Upload/PDF/EMI_statement_en.pdf) 5. Derating may be needed under low input voltages. Please check the derating curve for more details. 6. The ambient temperature derating of 3.5℃/1000m with fanless models and of 5℃/1000m with fan models for operating altitude higher than 2000m(6500ft). ※ Product Liability Disclaimer : For detailed information, please refer to https://www.meanwell.com/serviceDisclaimer.aspx								

This document is the property of OBSTA. It may not be reproduced or communicated to third parties without the written permission of OBSTA

5. Wiring

5.1. Internal wiring

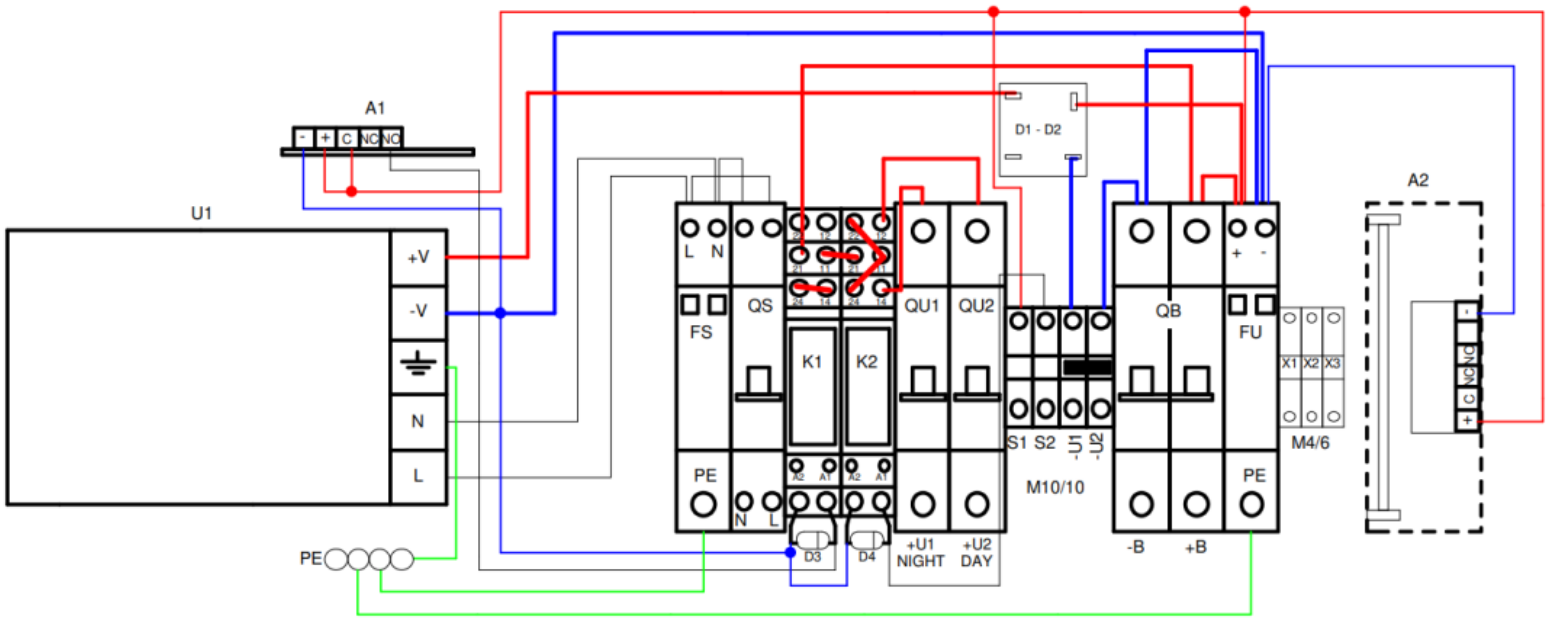

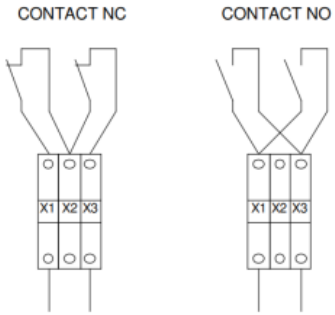

This document is the property of OBSTA. It may not be reproduced or communicated to third parties without the written permission of OBSTA

5.2. Battery

Storage: Always store batteries fully charged. If a battery is stored for a long period, it will top up every 6 months. Store batteries in a cool, dry place.

Temperature: Keep batteries at a temperature between -15°C and +50°C during charging and discharging. Avoid installing batteries near heat sources.

Recommendation: Avoid short-circuiting terminals. NEVER expose to flame. Avoid contact with any type of oil, solvent, petroleum-based detergent or ammonia solution, as this may damage the batteries.

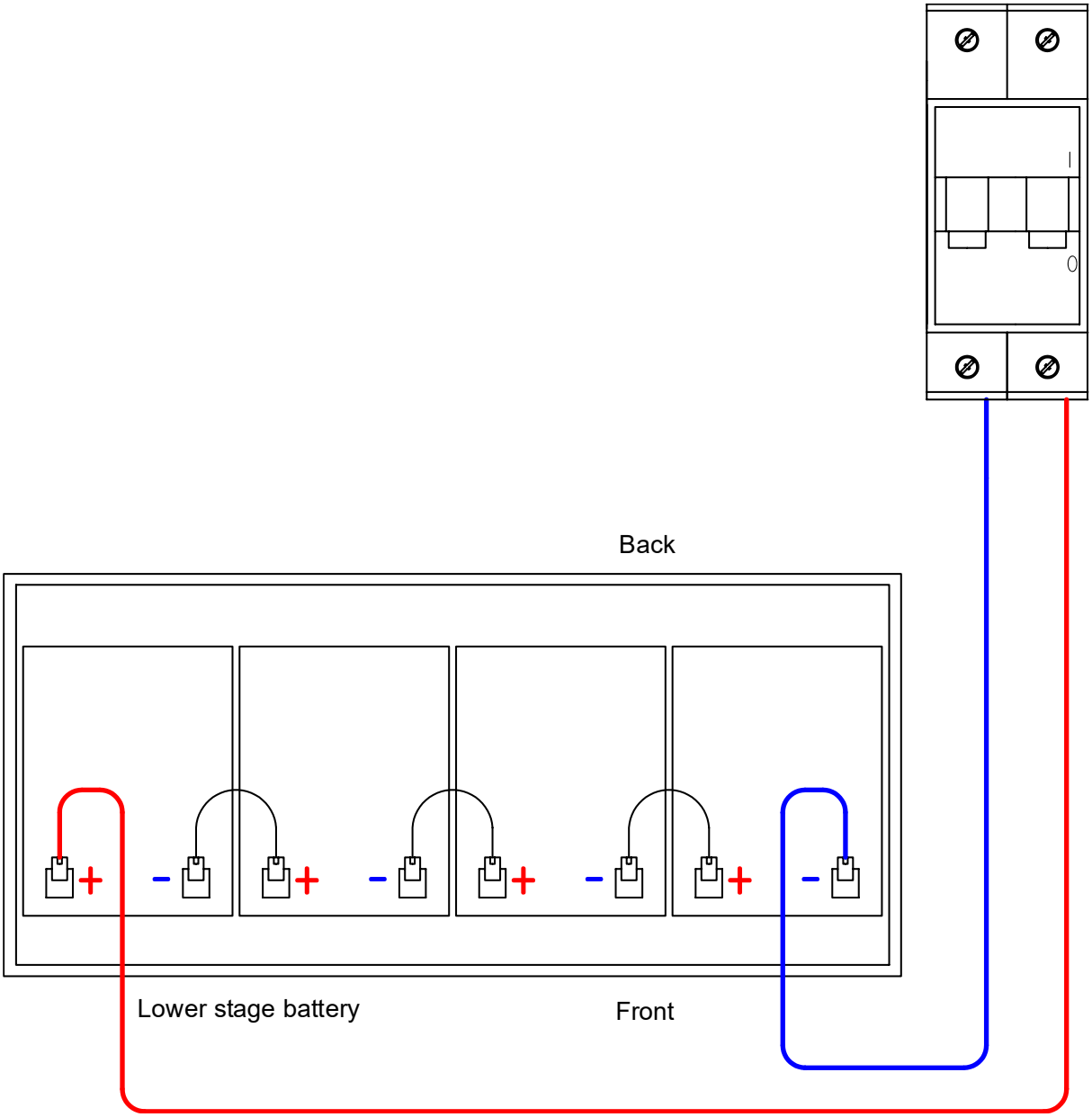

This document is the property of OBSTA. It may not be reproduced or communicated to third parties without the written permission of OBSTA

5.3. Photocell (option)

Connection with twilight sensor

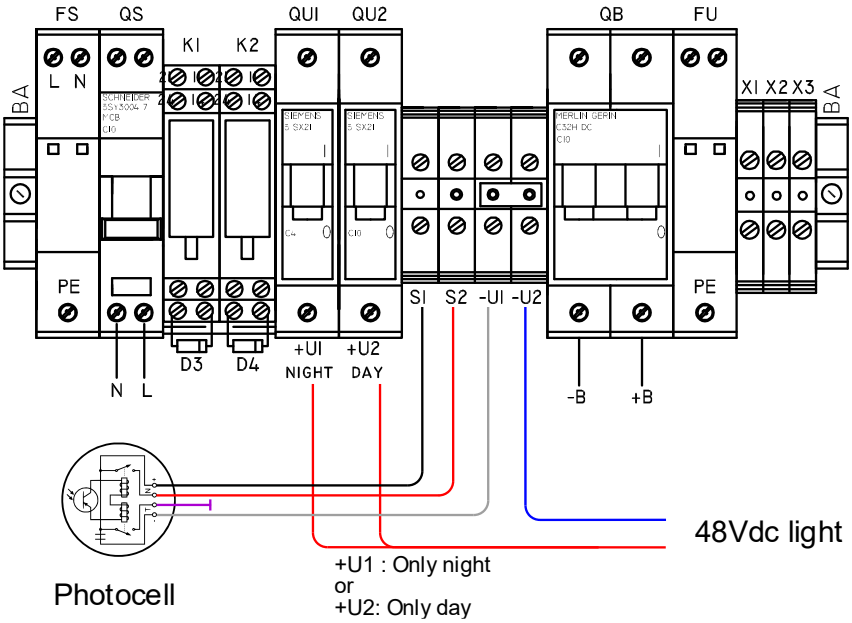

Connection without twilight sensor

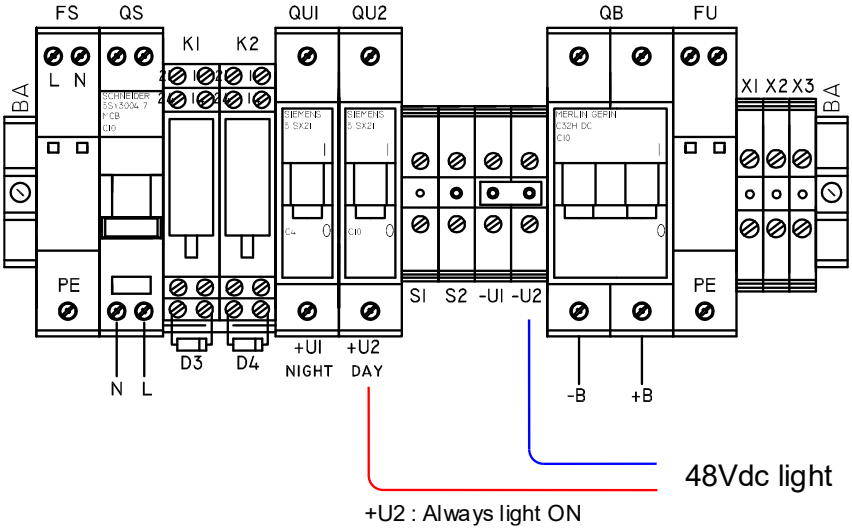

This document is the property of OBSTA. It may not be reproduced or communicated to third parties without the written permission of OBSTA

5.4. Electrical diagram

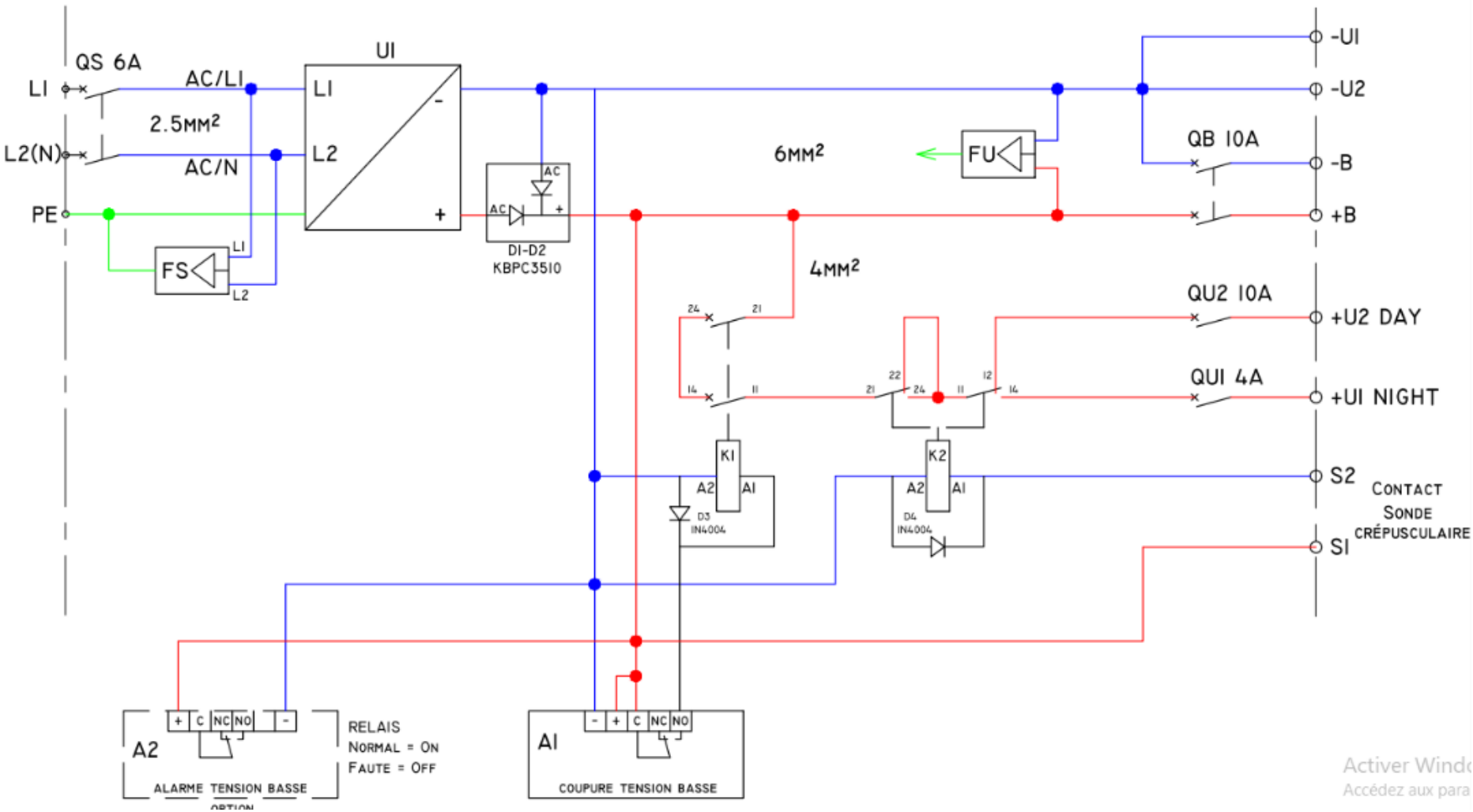

This document is the property of OBSTA. It may not be reproduced or communicated to third parties without the written permission of OBSTA

6. Maintenance

6.1. Annual visit

Test	Frequency	Preventive action	Risk
Wiring	Annual	Visual control Tightening cable glands Tightening PCB wires	Water infiltration Poor circuit Cable degradation
Waterproof	Annual	Visual verification Search for the water leak	Water infiltration Short circuit Lamp in default mode (or light off)
Clamping	Annual	Checking tightness	Cabinet falling
Aspect (rust, dust…)	Annual	Exterior cleaning	Malfunction

This document is the property of OBSTA. It may not be reproduced or communicated to third parties without the written permission of OBSTA

7. Appendix

7.1. Battery spécifications (AMC9022)

MAIN INFORMATION / INFORMATIONS GÉNÉRALES		
BRAND	MARQUE	NX
TECHNOLOGY	TECHNOLOGIE	LEAD CRYSTAL
NOMINAL VOLTAGE	TENSION NOMINALE	12V
NOMINAL CAPACITY	CAPACITÉ NOMINALE 25ºC	
C120		26,4AH
C20		24AH
C10		22AH
DIMENSIONS (±2mm)	DIMENSIONS (±2mm)	
• **Length** / Longueur		181mm
• **Width** / Largeur		76mm
• **Height** / Hauteur		170mm
• **TOTAL HEIGHT WITH TERMINALS** / Hauteur totale (avec cosses)		170mm
WEIGHT (±2%)	POIDS (±2%)	6,9Kg
POLARITY	POLARITÉ	- +
TERMINAL	TYPE DE COSSES	M5.F

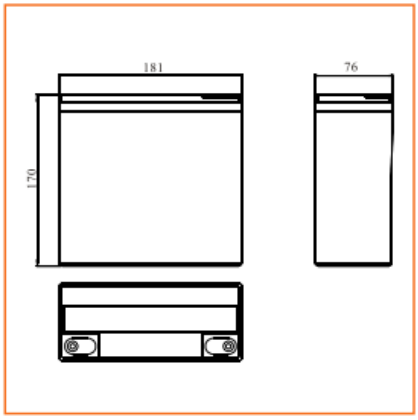

TECHNICAL INFORMATION / INFORMATIONS TECHNIQUES		
MAX DISCHARGE CURRENT	COURANT DE DÉCHARGE MAX	220A (5S)
INTERNAL RESISTANCE	RÉSISTANCE INTERNE 25ºC	10,8 mΩ
SELF DISCHARGE	AUTO DÉCHARGE	
3 months / 3 mois		95%
6 months / 6 mois		85%
12 months / 12 mois		80%
FLOAT CHARGING VOLTAGE	TENSION DE CHARGE EN FLOATING 25ºC	13,5V - 13,6V
CYCLING CHARGING VOLTAGE	TENSION DE CHARGE EN CYCLAGE	14,4V - 14,5V

DISCHARGE CURRENT AND CUT OFF VOLTAGE / COURANT DE DECHARGE ET TENSION DE FIN DE DECHARGE	
DISCHARGE CURRENT / COURRANT DE DÉCHARGE (A)	**DISCHARGE CUT OFF VOLTAGE** / TENSION DE FIN DE DÉCHARGE (V)
0,01C	11,40
0,01C - 0,05C	11,10
0,05C - 0,1C	10,80
0,1C - 0,5C	10,50
0,5C - 1C	10,20
1C - 3C	9,60
3C - 6C	9,00
6C - 10C	7,80
10C	7,20

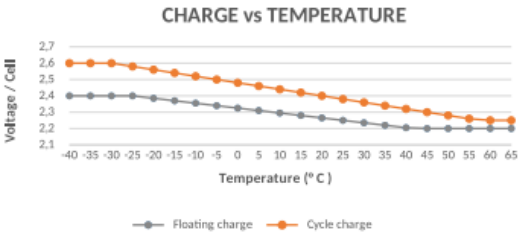

This document is the property of OBSTA. It may not be reproduced or communicated to third parties without the written permission of OBSTA

PRODUCT DESCRIPTION / DESCRIPTION DU PRODUIT

UK: Lead Crystal batteries offer significantly better performance than traditional lead acid battery technologies. Totally sealed, Lead Crystal batteries use a new type of electrolyte that crystallizes when charged/discharged. This new electrolyte technology (non-corrosive SiO2 acid) combined with the use of high quality plates (high-purity lead calcium selenium) considerably improves battery performance.

FR: Les batteries Lead Crystal offrent des performances nettement supérieures aux technologies classiques de batterie plomb. Totalement étanches, les batteries au plomb Crystal utilisent un nouveau type d'électrolyte qui se cristallise au fur à mesure des cycles. cette nouvelle technologie d'électrolyte (acide SiO2 non corrisif) combiné à l'usage de plaques de grande qualité (plomb pur calcium sélénium) permet d'améliorer considérablement les performances des batteries.

FEATURES / CARACTERISTIQUES PRINCIPALES

- Greenest lead acid battery:

Less acid, no cadmium, no antimony. NX lead crystal batteries are up to 99% recyclable and are classified as non-hazardous goods for transport.

- Long lifespan: Up to 11 years in floating and 2000 cycles at 50% DOD
- Good recovery from deep Cycle : Lead crystal batteries can be 100% discharged
- Long shelf life / Low self-discharge:
Up to 2 years in storage without refresh charging
- Very short recharge time / Higher availability:
Charge up to 3 time faster than other lead acid battery technologies

- Safest Lead Acid Technology:
- **Extreme temperature resistance (-40°C to +65°C)**
- **High resistance to vibration**
- **Operation in any direction**
- **Sealed and Maintenance Free**

- High Rate discharge : Excellent high rate discharge

- Batterie plomb la plus ecologique:

Moins d'acide, pas de cadmium, pas d'antimoine. Les batteries NX Lead Crystal sont recyclables jusqu'à 99 % et sont classées comme marchandises non dangereuses pour le transport.

- Longue durée de vie : Jusqu'à 11 ans en floating et 2000 cycles à 50% de décharge.
- Performance en décharge profonde: Supporte des profondeurs de décharge jusqu'à 100%
- Faible autodécharge / Longue durée de stockage : Les batteries lead crystal peuvent être stockées jusqu'à 2 ans sans recharge.
- Recharge rapide / Plus grande disponibilité :
Charge jusqu'à 3 fois plus rapide que les autres technologies de batteries au plomb

- Technologie Haute fiabilité:
- Bonne résistance aux températures extremes (-40°C à +65°C)
- Bonne résistance aux vibrations,
- Fonctionnement dans n'importe quel sens
- Etanche et sans entretien

- Décharge rapide : Excellentes performances pour des usages à débit élevé (UPS par exemple)

CAUTION / AVERTISSEMENT

- Operation in any orientation except permanently inverted.
- Continuous use of the battery in a permanently inverted position may adversely affect battery life and performance.
- End-of-life NX batteries must be recycled in accordance with current legislation.

- Fonctionnement dans n'importe quel sens sauf en utilisation inversée continue.
- L'utilisation continue de la batterie en position inversée peut impacter négativement sa durée de vie et ses performances.
- Les batteries NX en fin de vie doivent être recyclées selon la législation en vigueur.

APPLICATIONS / APPLICATIONS

Solar and renewable energies	Solaire et énergies renouvelables
Leisure (marine, camping car, etc.)	Servitude (marine, camping car, etc…)
Cyclic use (Mobility scooters, Electric vehicles, Golf carts, etc.)	Usage cyclique (Fauteuil roulant, Véhicule électrique, Golf etc...)
Medical	Médical
Emergency lighting	Éclairage de secours
Railway signal	Signalisation ferroviaire
Alarm and security system	Alarme et sécurité
Aircraft signal	Signal d'avion
Electronic devices and equipment	Appareils et équipements électroniques
Emergency backup	Alimentation de secours
Power supply	Réserve d'énergie

*** Non exhaustive list /** Liste non-exhaustive

This document is the property of OBSTA. It may not be reproduced or communicated to third parties without the written permission of OBSTA

CONSTANT CURRENT DISCHARGE CHARACTERISTICS / CARACTÉRISTIQUES DE DÉCHARGE À COURANT CONSTANT

Cut off voltage per cell	5min	15min	30min	45min	1h	2h	3h	4h	5h	6h	8h	10h	12h	20h	24h
1.60V	59.4	37.9	24.9	18.8	14.0	9.17	6.66	5.18	4.40	3.78	2.86	2.31	1.94	1.21	1.01
1.67V	51.1	34.3	23.1	17.8	13.8	8.75	6.33	5.12	4.18	3.74	2.81	2.26	1.94	1.21	1.01
1.70V	48.8	33.3	22.4	17.6	13.7	8.62	6.20	5.08	4.15	3.71	2.79	2.24	1.94	1.21	1.01
1.75V	44.4	31.1	21.5	16.9	13.5	8.29	6.02	4.95	4.02	3.63	2.75	2.22	1.92	1.21	1.01
1.80V	39.2	28.5	20.7	16.3	13.2	8.00	5.94	4.86	3.93	3.54	2.68	2.20	1.88	1.21	1.01
1.83V	34.2	26.1	19.1	15.1	12.6	7.65	5.72	4.66	3.76	3.41	2.59	2.13	1.83	1.20	0.98
1.85V	29.3	23.6	17.6	14.0	11.9	7.32	5.50	4.48	3.60	3.30	2.50	2.07	1.78	1.20	0.95

Units: Amperes (25°C, 77°F)

CONSTANT CURRENT DISCHARGE CHARACTERISTICS / CARACTÉRISTIQUES DE DÉCHARGE À COURANT CONSTANT

Cut off voltage per cell	5min	15min	30min	45min	1h	2h	3h	4h	5h	6h	8h	10h	12h	20h	24h
1.60V	97.72	65.80	45.03	34.33	28.36	16.82	12.17	9.84	8.16	7.35	5.56	4.53	3.79	2.36	1.98
1.67V	87.30	61.35	42.16	32.84	27.70	16.54	11.99	9.79	8.02	7.26	5.45	4.43	3.79	2.36	1.98
1.70V	84.48	59.75	41.00	32.49	26.91	16.38	11.84	9.73	7.96	7.22	5.43	4.38	3.79	2.34	1.97
1.75V	72.19	56.18	39.65	31.49	26.17	15.83	11.56	9.57	7.76	7.11	5.32	4.34	3.79	2.32	1.97
1.80V	64.55	51.77	38.30	30.49	25.19	15.31	11.43	9.40	7.57	7.00	5.23	4.30	3.69	2.32	1.97
1.83V	60.85	47.93	35.77	28.57	23.92	14.74	11.04	9.09	7.31	6.80	5.06	4.19	3.60	2.30	1.92
1.85V	54.17	44.10	33.24	26.65	22.68	14.18	10.64	8.77	7.02	6.61	4.89	4.08	3.51	2.29	1.87

Units: Watts per cell (25°C, 77°F)

CHARGE AND DISCHARGE CURVES / COURBES DE CHARGE ET DÉCHARGE

Temperture and float service life / Température et durée de vie

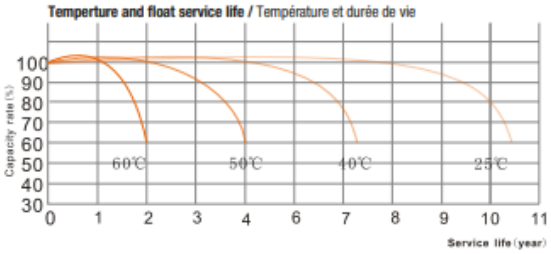

Temperture and discharge capacity / Température et capacité de décharge

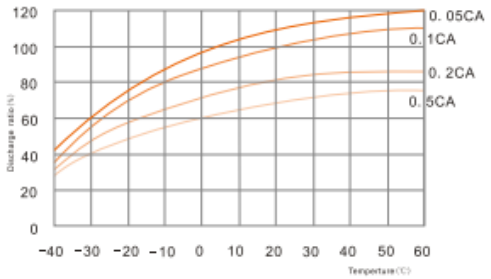

Discharge characteristics 77°F (25°C) / Caractéristiques de décharge 77°F (25°C)

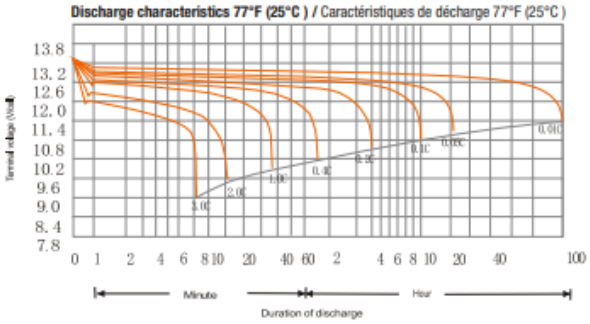

Float service life / Durée de vie en floating

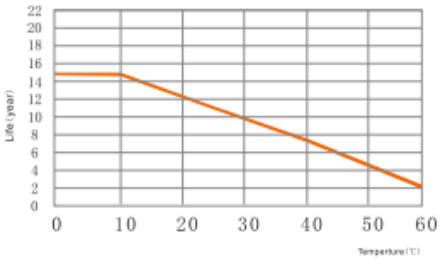

Charge characteristics 77°F (25°C) / Caractéristiques de charge 77°F (25°C)

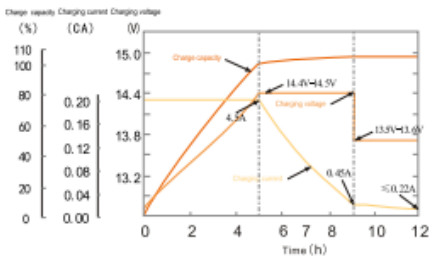

Cycle life curves (25°C) / Courbes de cycle de vie (25°C)
Discharge at 0.1C /Cut off voltage 1.8V by cell

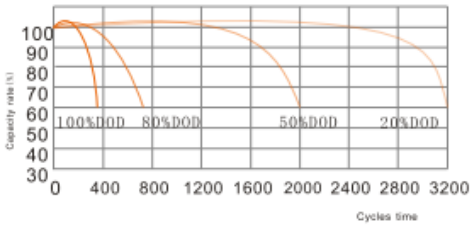

This document is the property of OBSTA. It may not be reproduced or communicated to third parties without the written permission of OBSTA