COFFRET "ALIMENTATION" 48Vdc 300W
Bornier Relais

OBSTA
2 rue Troyon
92316 Sčvres
www.obsta.com

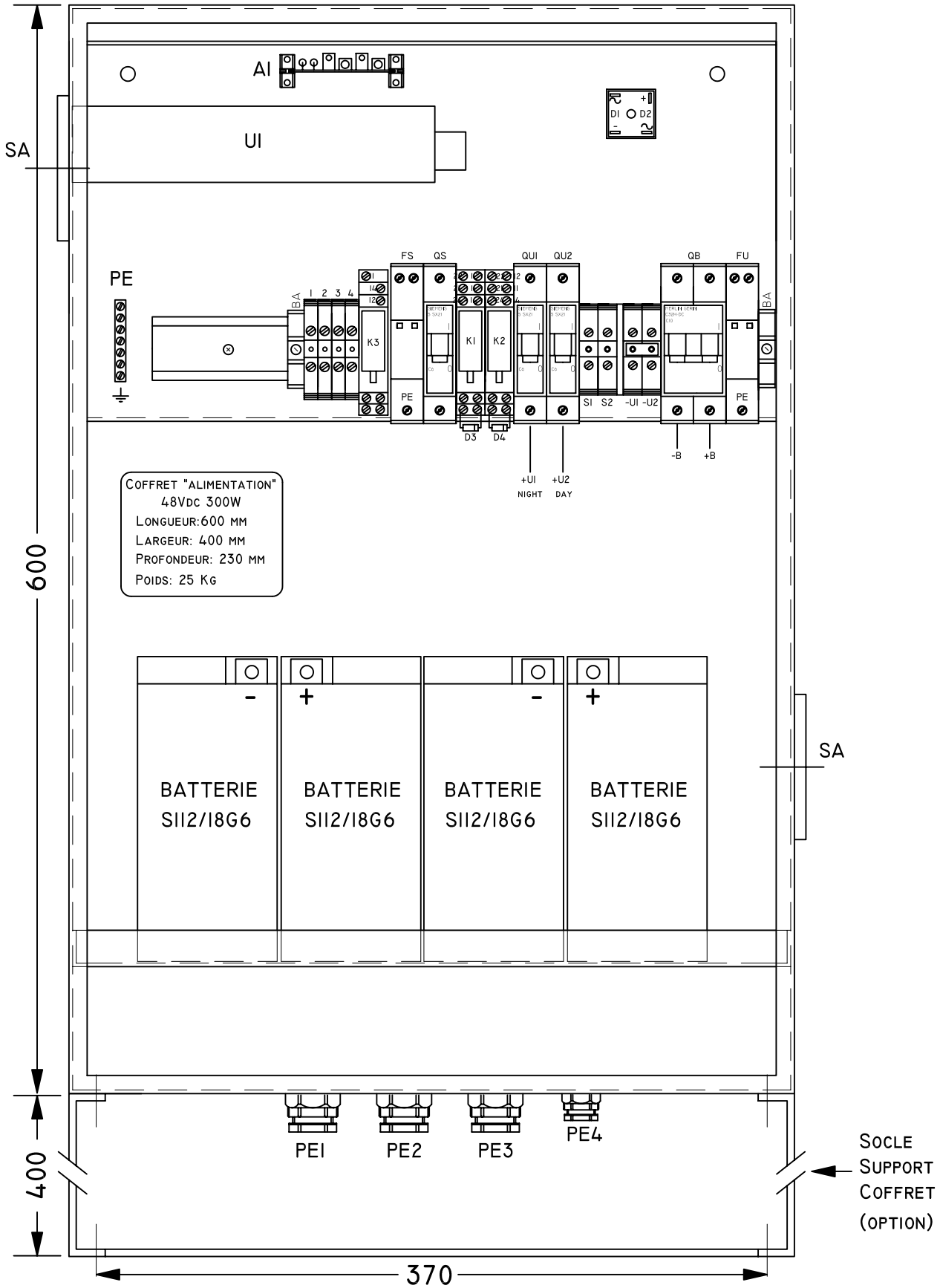

	Ed.1 :	Ed.2 :	Ed.3 :	Ed.4 :	Ed.5 :	E.S :	Echelle / Scale :
Mise à jour : / Update :	14/01/19					Tolérance : / Tolerance : ISO 2768-M	Format : / Size : A4-V
Dessiné par : / Drawing by :	T.BARDOT					Folio 1/1	
Vérifié par : / Approved by :	J.CARELLA						

COFFRET "ALIMENTATION" 48VDC 300W

BORNIER ALARMES DÉPARTS UTILISATION

AS 0386.12 PE1

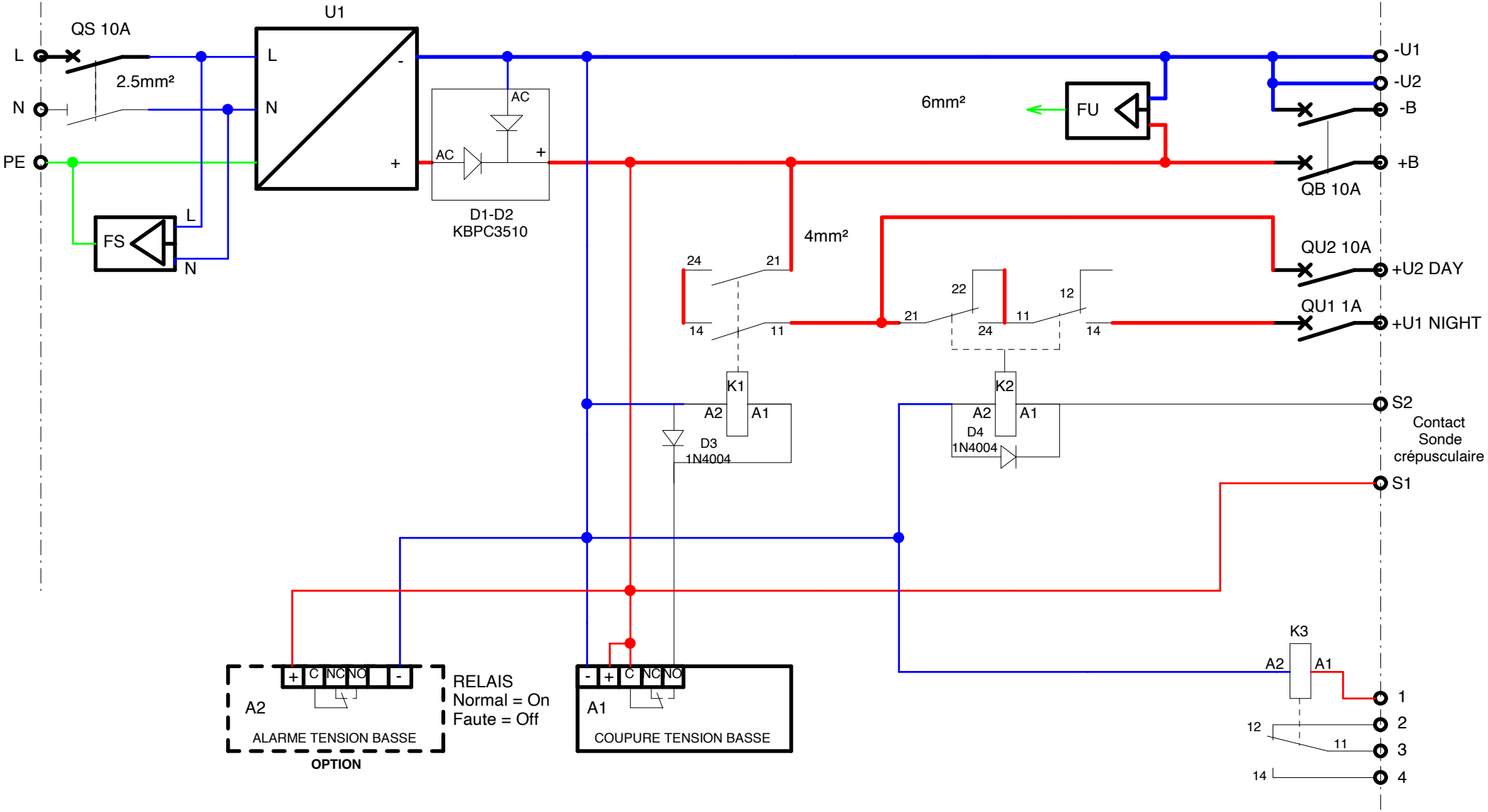

09/01/2019	ALIMENTATION 48V 300W-S-V7
	Code 113956-RW

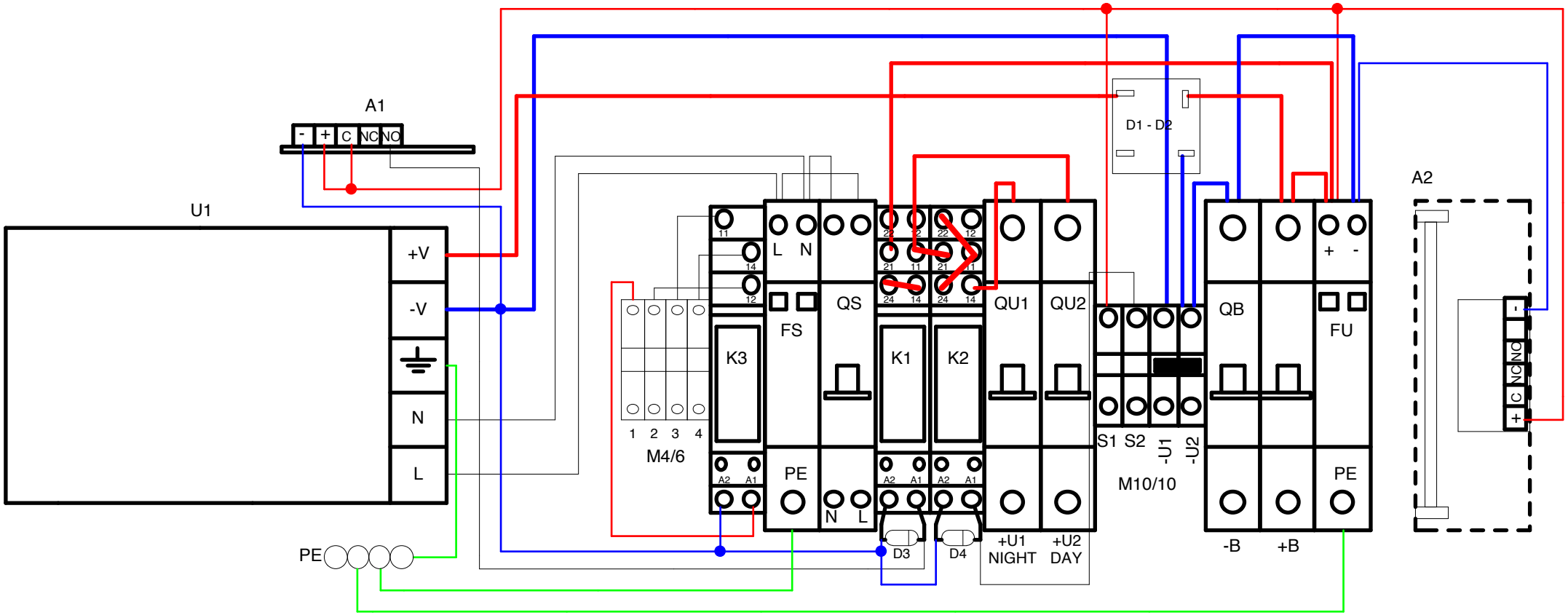

09/01/2019	ALIMENTATION 48V 300W-S-V7
	Code 113956-RW

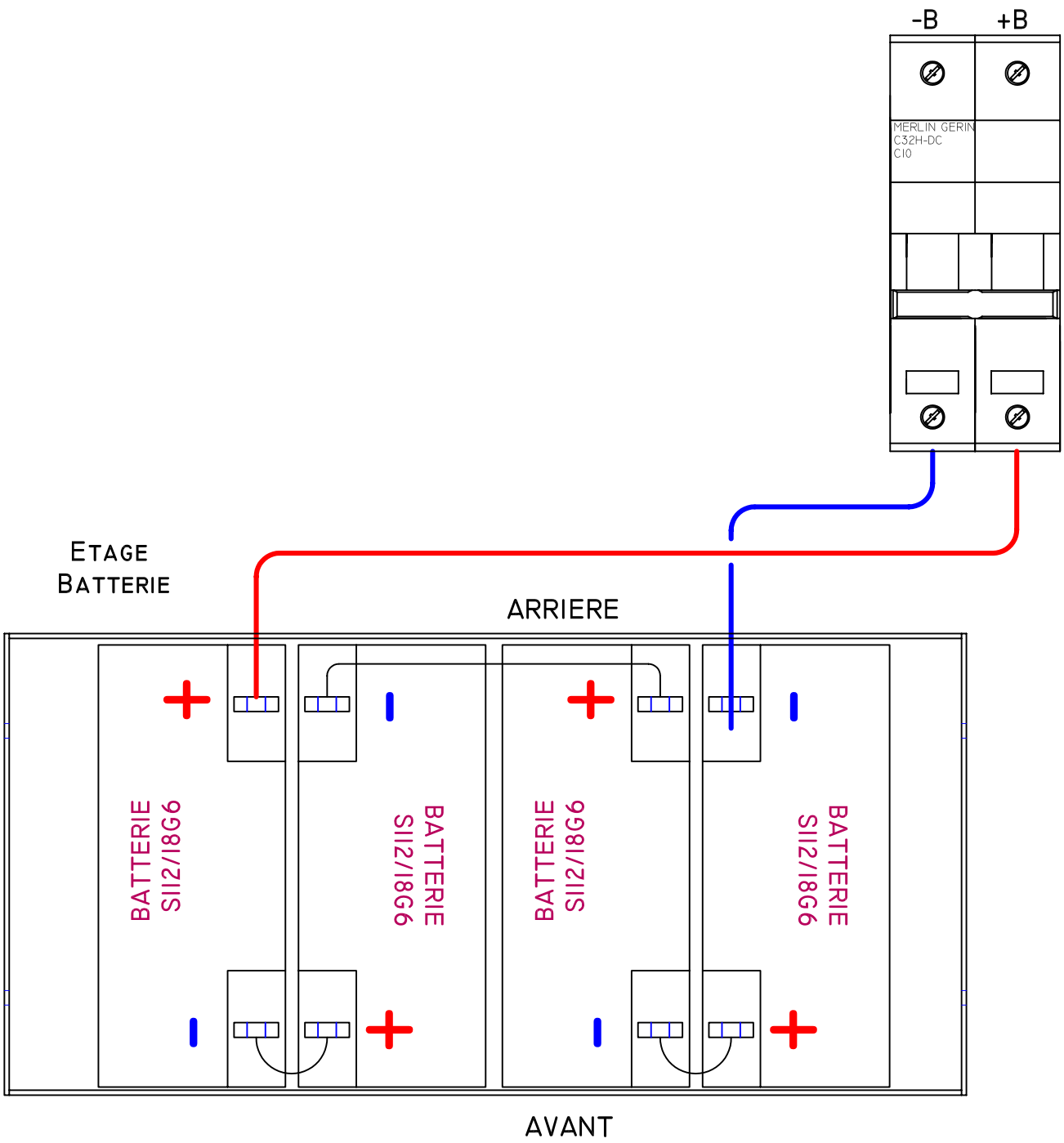

	Ed.1 :	Ed.2 :	Ed.3 :	Ed.4 :	Ed.5 :	E.S :	Echelle / *Scale* :
Mise à jour : *Correction :*	14/01/19					Tolérance : *Tolerance :*	Format *Size :* A4-V
Dessiné par : *Prepared by :*	T.BARDOT					Folio 1/1	
Vérifié par : *Approved by :*	J.CARELLA						

Coffret "ALIMENTATION" 48Vdc 300W
Câblage Batteries

AS 0386.12 P2

Repère	Nb	Désignation	Rèfèrence	Designation	Fournisseur
PE	1	**Barrette de masse**	5 plots	*Earth bar*	ABB
	4	**Repère bloc**			ABB
	4	**Barrette de marquage**	1050004	*Inscription Bar*	Phoenix contact
BA	2	**Butée d'arrêt BAM2**	0206 35 116	*Terminal Block*	ABB
Flasque	1	**Flasque**	3214314	*Terminal Block*	Phoenix contact
K3	1	**Relais 48V + Socle bleu**	95.03 SPA	*Relay48V + Blue Holder*	FINDER
K1 K2	2	**Relais 48V + Socle**	40.52.7.048	*Relay48V + Holder*	FINDER
FS	1	**Parafoudre**	DS215 - 230/G	*Lighting Protection*	CITEL
FU	1	**Parafoudre**	DS230 - 48DC	*Lighting Protection*	CITEL
B	4	**Batterie 12V 18Ah**	S 112/18 G6	*Battery 12V 18Ah*	POWERFIT
	1	**Rail DIN**	35x15 Long. 340 mm	*DIN Rail*	ERICO
D3 - D4	2	**Diode**	1N4004	*Diode*	THOMSON
D2 - D2	1	**Pont de Diode**	KBPC3510	*DiodeBridge*	THOMSON
U1	1	**Alimentation 48Vdc 300W**	HRP300 - 48	*48Vdc 300W Power*	MEAN WELL
A1	1	**Carte RVU**	RV 1521-3	*RVU Card*	OBSTA
QU2	1	**Disjoncteur 1P C10**	5SY61 MCB C10	*Circuit breaker 1P C10*	SIEMENS
QU1	1	**Disjoncteur 1P C4**	5SY61 MCB C4	*Circuit breaker 1P C4*	SIEMENS
QB	1	**Disjoncteur 2P C10**	C32H-DC C10 20545	*Circuit breaker 2P C10*	MERLIN GERIN
QS	1	**Disjoncteur 1P C10**	5SY61 MCB C10	*Circuit breaker 1P C10*	SIEMENS
X1X2X3X4	4	**Borne M4/6**	115 116 07	*Terminal 4/6mm²*	ENTRELEC
-U1 -U2	2	**Borne M10/10**	125 120 17	*terminal 10/10mm²*	ENTRELEC
S1 S2	2	**Borne M10/10**	115 120 17	*terminal 10/10mm²*	ENTRELEC
PE4	1	**Presse étoupe PG 11**	PG 11	*Cable gland PG11*	CAPRI
PE1 à PE3	3	**Presse étoupe PG 13**	PG 13	*Cable gland PG13*	CAPRI
ENV	1	**Coffret NSYS3D6425**	600 x 400 x 230	*Steel box*	SCHNEIDER

MISE A JOUR *UPDATE*	**Ed1 :** 14/01/19	**Ed2 :**	**Ed3 :**	**Ed4 :**	**Ed5 :**	**E.S.**	**FORMAT :** *SIZE :* **A4**
ETABLI PAR: *DRAFT BY:*	T. BARDOT					**FOLIO** 1/1	
VERIFIE PAR: *APPROVED BY:*	J. CARELLA						

COFFRET ALIMENTATION 48Vdc 300W

AS 0386.12 N

300W Single Output with PFC Function

HRP-300 series

Features :

- Universal AC input / Full range
- Built-in active PFC function, PF>0.95
- High efficiency up to 89%
- Withstand 300VAC surge input for 5 seconds
- Protections: Short circuit / Overload / Over voltage / Over temperature
- Built-in constant current limiting circuit
- 1U low profile 41mm
- Built-in cooling fan ON-OFF control
- Built-in DC OK signal
- Built-in remote sense function
- 5 years warranty

SPECIFICATION

MODEL		HRP-300-3.3	HRP-300-5	HRP-300-7.5	HRP-300-12	HRP-300-15	HRP-300-24	HRP-300-36	HRP-300-48
OUTPUT	DC VOLTAGE	3.3V	5V	7.5V	12V	15V	24V	36V	48V
	RATED CURRENT	60A	60A	40A	27A	22A	14A	9A	7A
	CURRENT RANGE	0 ~ 60A	0 ~ 60A	0 ~ 40A	0 ~ 27A	0 ~ 22A	0 ~ 14A	0 ~ 9A	0 ~ 7A
	RATED POWER	198W	300W	300W	324W	330W	336W	324W	336W
	RIPPLE & NOISE (max.) Note.2	80mVp-p	90mVp-p	100mVp-p	120mVp-p	150mVp-p	150mVp-p	250mVp-p	250mVp-p
	VOLTAGE ADJ. RANGE	2.8 ~ 3.8V	4.3 ~ 5.8V	6.8 ~ 9V	10.2 ~ 13.8V	13.5 ~ 18V	21.6 ~ 28.8V	28.8 ~ 39.6V	40.8 ~ 55.2V
	VOLTAGE TOLERANCE Note.3	±2.5%	±2.0%	±2.0%	±1.0%	±1.0%	±1.0%	±1.0%	±1.0%
	LINE REGULATION	±0.5%	±0.5%	±0.5%	±0.3%	±0.3%	±0.2%	±0.2%	±0.2%
	LOAD REGULATION	±1.0%	±1.0%	±1.0%	±0.5%	±0.5%	±0.5%	±0.5%	±0.5%
	SETUP, RISE TIME	1000ms, 50ms/230VAC 2500ms, 50ms/115VAC at full load							
	HOLD UP TIME (Typ.)	16ms/230VAC 16ms/115VAC at full load							
INPUT	VOLTAGE RANGE Note.5	85 ~ 264VAC 120 ~ 370VDC							
	FREQUENCY RANGE	47 ~ 63Hz							
	POWER FACTOR (Typ.)	PF>0.95/230VAC PF>0.99/115VAC at full load							
	EFFICIENCY (Typ.)	80%	82%	86%	88%	88%	87%	88%	89%
	AC CURRENT (Typ.)	4.5A/115VAC 2.5A/230VAC							
	INRUSH CURRENT (Typ.)	35A/115VAC 70A/230VAC							
	LEAKAGE CURRENT	<1.2mA / 240VAC							
PROTECTION	OVERLOAD	105 ~ 135% rated output power							
		Protection type : Constant current limiting, recovers automatically after fault condition is removed							
	OVER VOLTAGE	3.96 ~ 4.62V	6 ~ 7V	9.4 ~ 10.9V	14.4 ~ 16.8V	18.8 ~ 21.8V	30 ~ 34.8V	41.4 ~ 48.6V	57.6 ~ 67.2V
		Protection type : Shut down o/p voltage, re-power on to recover							
	OVER TEMPERATURE	Shut down o/p voltage, recovers automatically after temperature goes down							
FUNCTION	DC OK SIGNAL	PSU turns on : 3.3 ~ 5.6V ; PSU turns off : 0 ~ 1V							
	FAN CONTROL (Typ.)	Load 35±15% or RTH2≧50℃ Fan on							
ENVIRONMENT	WORKING TEMP.	-40 ~ +70℃ (Refer to "Derating Curve")							
	WORKING HUMIDITY	20 ~ 90% RH non-condensing							
	STORAGE TEMP., HUMIDITY	-40 ~ +85℃, 10 ~ 95% RH							
	TEMP. COEFFICIENT	±0.03%/℃ (0 ~ 50℃)							
	VIBRATION	10 ~ 500Hz, 5G 10min./1cycle, 60min. each along X, Y, Z axes							
SAFETY & EMC (Note 4)	SAFETY STANDARDS	UL60950-1, TUV EN60950-1 approved							
	WITHSTAND VOLTAGE	I/P-O/P:3KVAC I/P-FG:2KVAC O/P-FG:0.5KVAC							
	ISOLATION RESISTANCE	I/P-O/P, I/P-FG, O/P-FG:100M Ohms / 500VDC / 25℃ / 70% RH							
	EMC EMISSION	Compliance to EN55022 (CISPR22) Class B, EN61000-3-2,-3							
	EMC IMMUNITY	Compliance to EN61000-4-2,3,4,5,6,8,11, EN55024, EN61000-6-2, heavy industry level, criteria A							
OTHERS	MTBF	176K hrs min. MIL-HDBK-217F (25℃)							
	DIMENSION	199*105*41mm (L*W*H)							
	PACKING	0.95Kg;15pcs/15.3Kg/0.69CUFT							

NOTE

1. All parameters NOT specially mentioned are measured at 230VAC input, rated load and 25℃ of ambient temperature.
2. Ripple & noise are measured at 20MHz of bandwidth by using a 12" twisted pair-wire terminated with a 0.1uf & 47uf parallel capacitor.
3. Tolerance : includes set up tolerance, line regulation and load regulation.
4. The power supply is considered a component which will be installed into a final equipment. The final equipment must be re-confirmed that it still meets EMC directives. For guidance on how to perform these EMC tests, please refer to EMI testing of component power supplies. (as available on http://www.meanwell.com)
5. Derating may be needed under low input voltages. Please check the derating curve for more details.

■ Mechanical Specification

Case No.980A Unit:mm

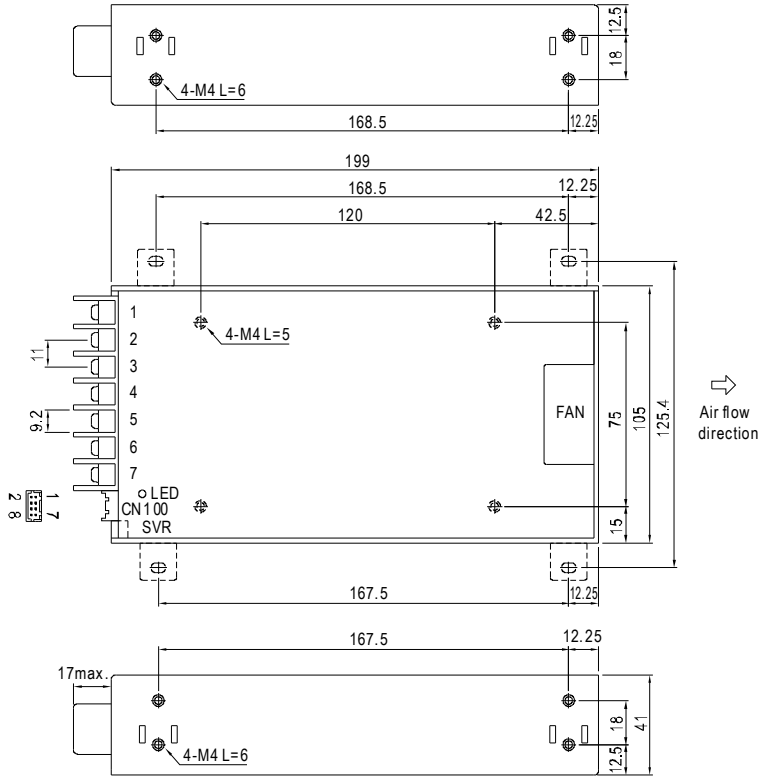

Terminal Pin No. Assignment

Pin No.	Assignment	Pin No.	Assignment
1	AC/L	4,5	DC OUTPUT -V
2	AC/N	6,7	DC OUTPUT +V
3	FG ⏚		

Connector Pin No. Assignment (CN100) :
HRS DF11-08DP-2DS or equivalent

Pin No.	Assignment	Mating Housing	Terminal
1,2,4,6	NC	HRS DF11-8DS or equivalent	HRS DF11-**SC or equivalent
3	DC-OK		
5	GND		
7	+S		
8	-S		

■ Block Diagram

fosc : 70KHz

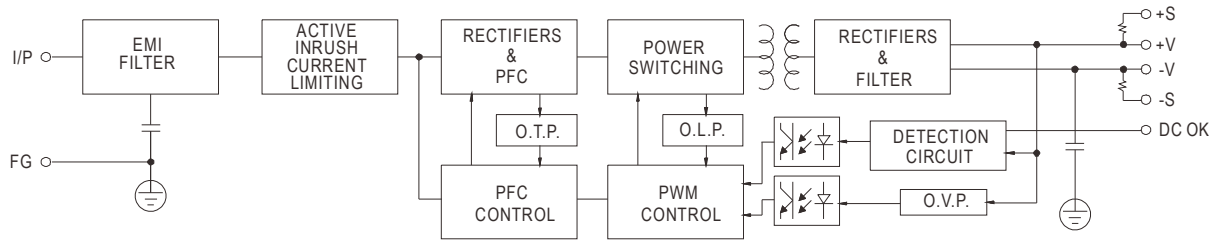

■ Derating Curve

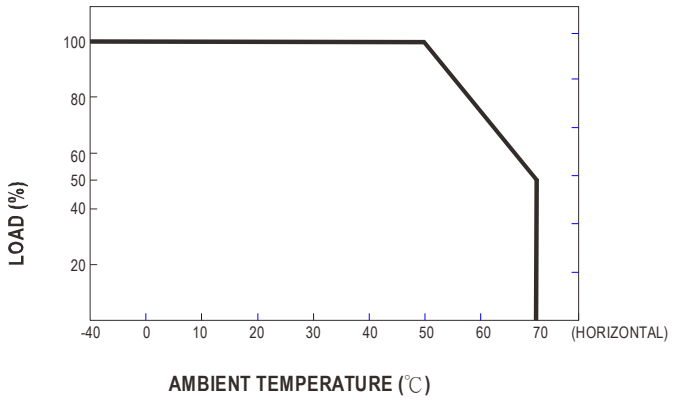

■ Output Derating VS Input Voltage

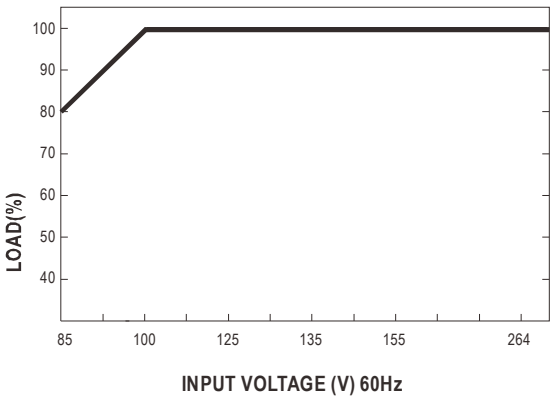

GNB® INDUSTRIAL POWER
A Division of Exide Technologies

Industrial Batteries / Network Power

Powerfit S100

»The **compact energy package**
for **more security**«

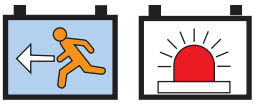

Powerfit®

Powerfit S100

The compact all-rounder

GNB's Powerfit S100 are general purpose batteries designed to deliver high performance in case of power interruptions. They are the ideal solution for applications such as security & alarm systems, emergency lighting, signaling, and any other UPS application where compact and reliable back-up power is key.

Specifications:

- Rechargeable VRLA batteries in which the electrolyte is fixed in a glass mat (with very fine glass fibres)
- Perfect combination of energy storage performance and reliability
- Maintenance-free (no topping up) during the whole service life
- Nominal capacity 1.2 – 38 Ah
- 3-5 years design life at 20 °C ambient temperature (80% re-maining capacity)
- Container in ABS Material
- Designed in accordance with IEC 60896-21/22
- Grid plate construction consisting of a lead calcium alloy
- Low gas emission due to high gas recombination of 99%
- Low self-discharge rate (about 3% / month at 20 °C)
- Trouble-free transport of operational blocks, no restrictions for rail, road, sea and air transportation (IATA, DGR clause A67)
- Completely recyclable

Technical characteristics and data

Type	Part number	Nom-voltage V	Nom. capacity C_{20} 1.80 Vpc 25 °C Ah	C_{10} 1.75 Vpc 25 °C Ah	C_1 1.6 Vpc 25 °C Ah	Length* (l) mm	Width* (b/w) mm	Height* (h) mm	Weight ca. kg	Internal-resistance acc. to IEC 60896-21 mΩ	Max. discharge current f. 5 sec. A	Terminal
S106/1.2 S	NAS10601D2VW0SA	6	1.20	1.14	0.73	97.0	24.0	57.5	0.29	65.0	18.0	S-4.8
S106/4.5 S	NAS10604D5VW0SA	6	4.50	4.27	2.73	70.0	47.0	106	0.81	25.0	67.5	S-4.8
S106/12 SR	NAS1060012VW0RA	6	12.0	11.5	7.54	151	51.0	100	1.80	15.0	180	SR-6.3
S112/1.2 S	NAS11201D2VW0SA	12	1.20	1.14	0.73	97.0	43.0	58.0	0.57	90.0	18.0	S-4.8
S112/1.9 S	NAS11201D9VW0SA	12	1.90	1.80	1.15	178	35.0	65.0	0.87	80.0	28.5	S-4.8
S112/4.5 S	NAS11204D5VW0SA	12	4.50	4.27	2.73	90.0	70.0	107	1.48	40.0	67.5	S-4.8
S112/7.2 S	NAS11207D2VW0SA	12	7.20	6.82	4.44	151	65.0	99.0	2.35	22.0	108	S-4.8
S112/7.2 SR	NAS11207D2VW0RA	12	7.20	6.82	4.44	151	65.0	99.0	2.35	22.0	108	SR-6.3
S112/9 SR	NAS1120009VW0RA	12	9.00	8.06	5.31	151	65.0	99.0	2.45	18.0	127.5	SR-6.3
S112/12 S	NAS1120012VW0SA	12	12.0	11.5	7.54	151	98.0	101	3.50	14.0	180	S-4.8
S112/12 SR	NAS1120012VW0RA	12	12.0	11.5	7.54	151	98.0	101	3.50	14.0	180	SR-6.3
S112/18 G6	NAS1120018VW0BA	12	18.0	17.2	11.3	181.5	77.0	167.5	5.40	16.0	270	G-M6
S112/26 G6	NAS1120026VW0BA	12	26.0	24.8	16.3	166	175	125	8.00	14.0	390	G-M6
S112/38 F6	NAS1120038VW0FA	12	38.0	38.0	23.2	197	165	170	12.20	10.0	456	F-M6

* ±2 mm

Nominal capacity 1.2 – 38 Ah C_{20} | Block battery | Grid plate | Recyclable | Valve regulated lead-acid batteries | Maintenance-free (no topping up)

Powerfit S100

The compact energy source with high performance

Dimensions

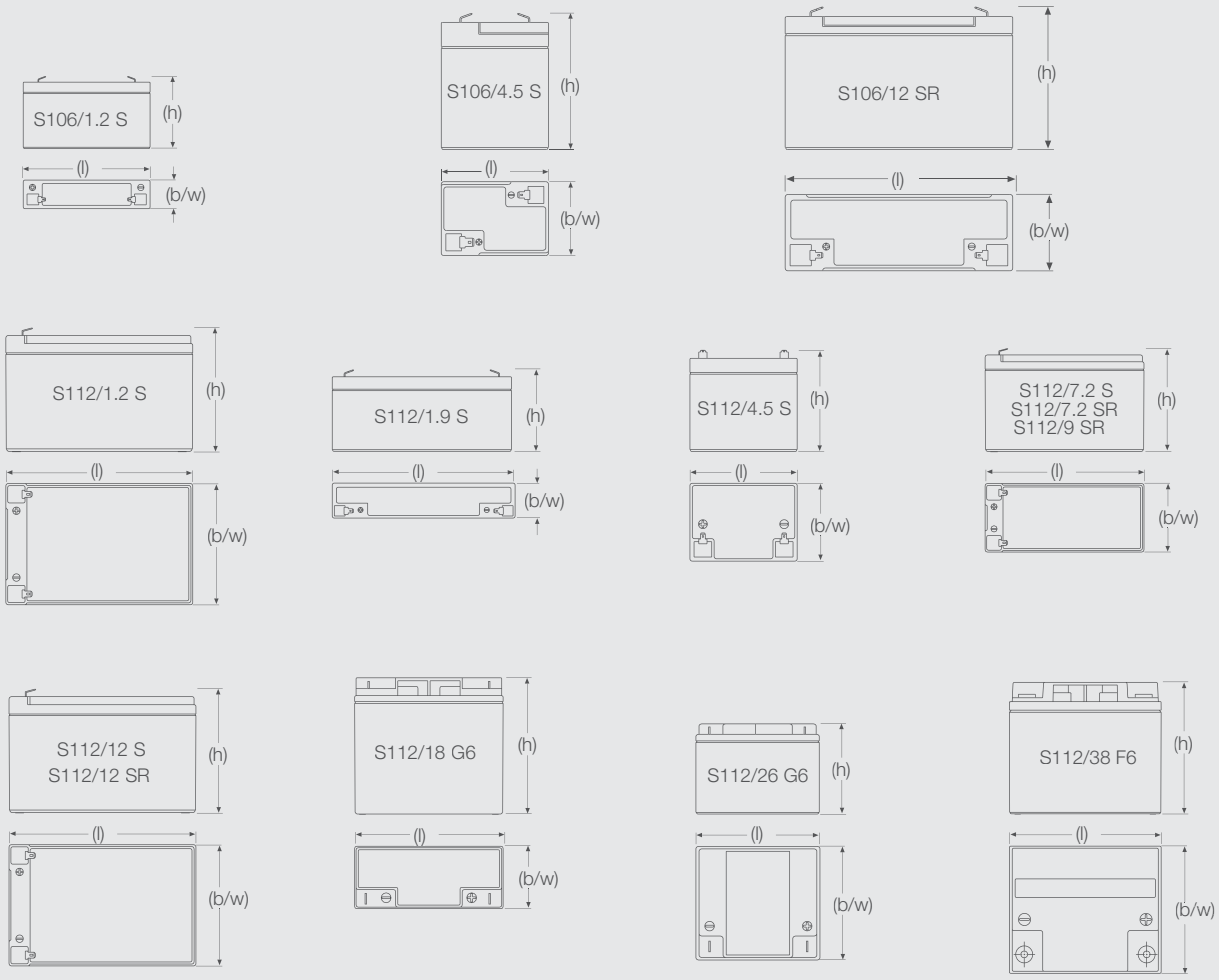

Container and terminal

> **Container:** ABS

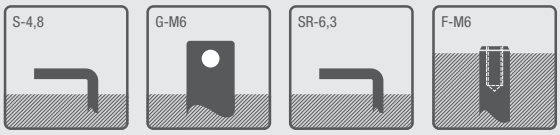

Applications

In addition to their suitability for general applications in security systems, the Powerfit S100 batteries are a reliable energy source for emergency lighting.

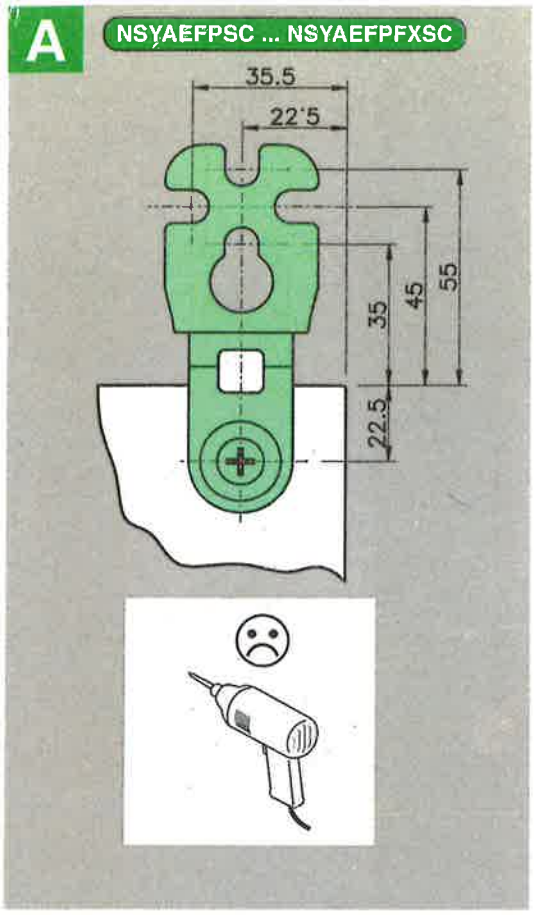
A
NSYAEFPSC ... NSYAEFPFXSC
35.5
22'5
35
45
55
22.5

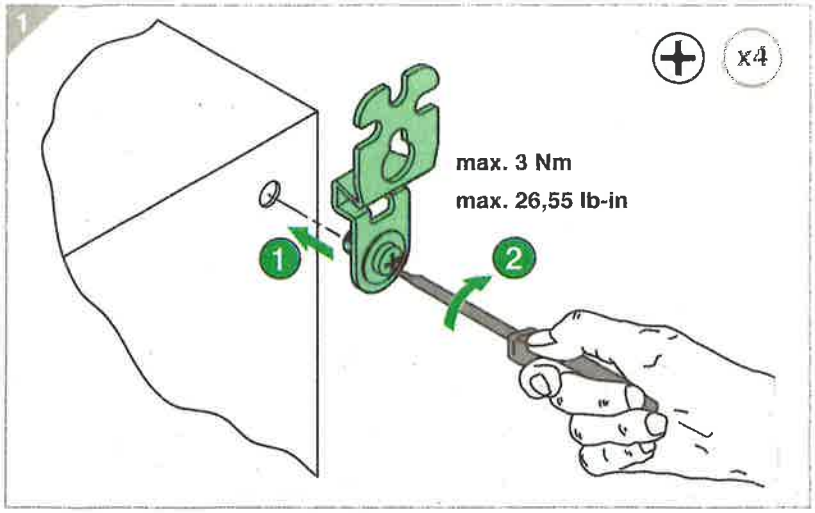
1
x4
max. 3 Nm
max. 26,55 lb-in
1
2

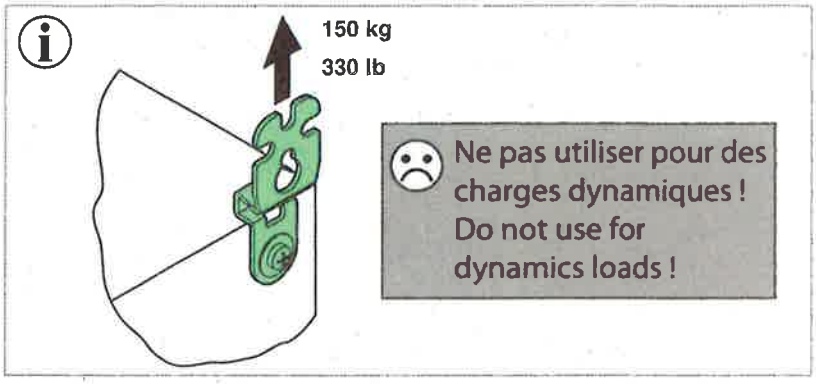
150 kg
330 lb
Ne pas utiliser pour des charges dynamiques !
Do not use for dynamics loads !

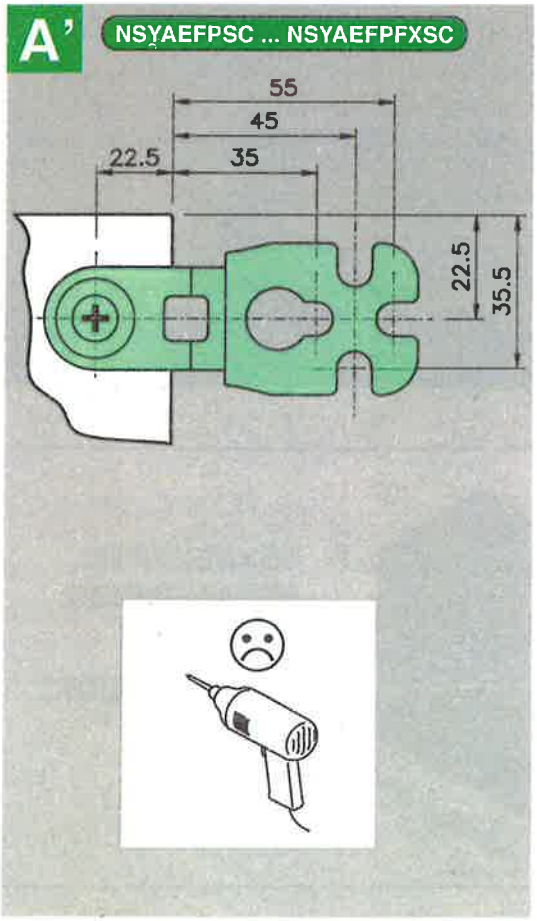
A'
NSYAEFPSC ... NSYAEFPFXSC
55
45
22.5
35
22.5
35.5

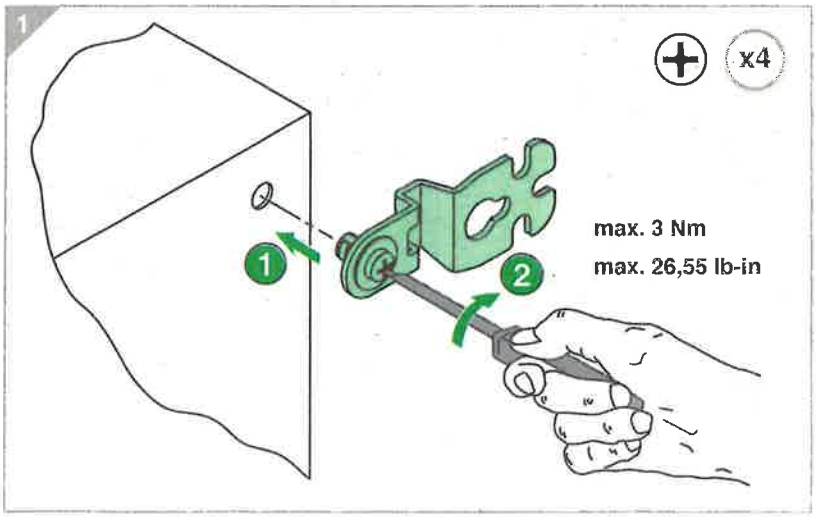
1
x4
max. 3 Nm
max. 26,55 lb-in
1
2

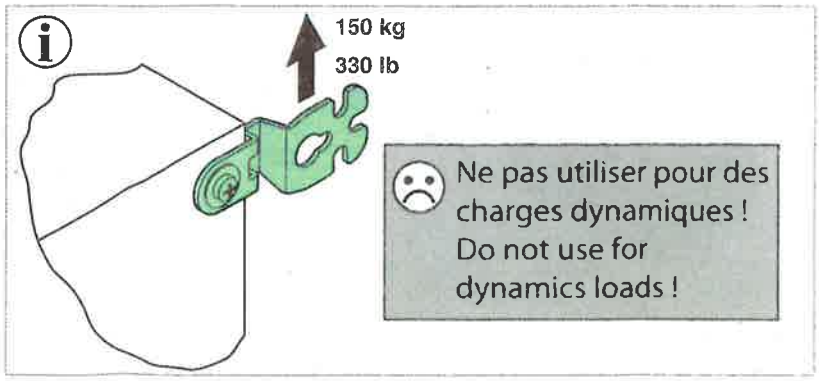
150 kg
330 lb
Ne pas utiliser pour des charges dynamiques !
Do not use for dynamics loads !